SERVICE MANUAL

HAMMOND B-300 COMBO ORGAN

18550K

CAUTION!
see safety notice inside

HOOO-006148-OOJ

NIHON HAMMOND LIMITED

• HEAD OFFICE / 2-30. 2-chome. Shinkitajima, Suminoe-ku, Osaka, Japan.
& FACTORY 〒559 (For Service Assistance Contact)
• PHONE / (06)-685-3905

B-300

SAFETY NOTICE

Great care has been taken in the design and manufacture of this product to assure that no shock hazard exists on any exposed metal parts. Internal service operations can expose the technician to hazardous line voltages and accidentally cause these voltages to appear on exposed metal parts during repair or reassembly of product components. To prevent this, work on these products should only be performed by those who are throughly familiar with the precautions necessary when working on this type of equipment.

To protect the user, it is required that all enclosure parts and safety interlocks be restored to their original condition and the following tests be performed before returning the product to the owner after any service operation.

Plug the AC line cord directly into a line voltage AC receptacle (do not use an isolation transformer for this test) and turn the product on. Connect the network (as shown below) in series with all exposed metal parts and a known earth ground such as a water pipe or conduit. Use an AC VOM of 5,000 ohms per volt or higher sensitivity to measure the voltage drop across the network. More the network connection to each exposed metal part (metal chassis, screw heads, knobs and control shafts, escutcheon, etc.) and measure the voltage drop across the network. Reverse the line plug and repeat the measurements. Any reading of 4 volts RMS or more is excessive and indicates a potential shock hazard which must be corrected before returning the product to the user.

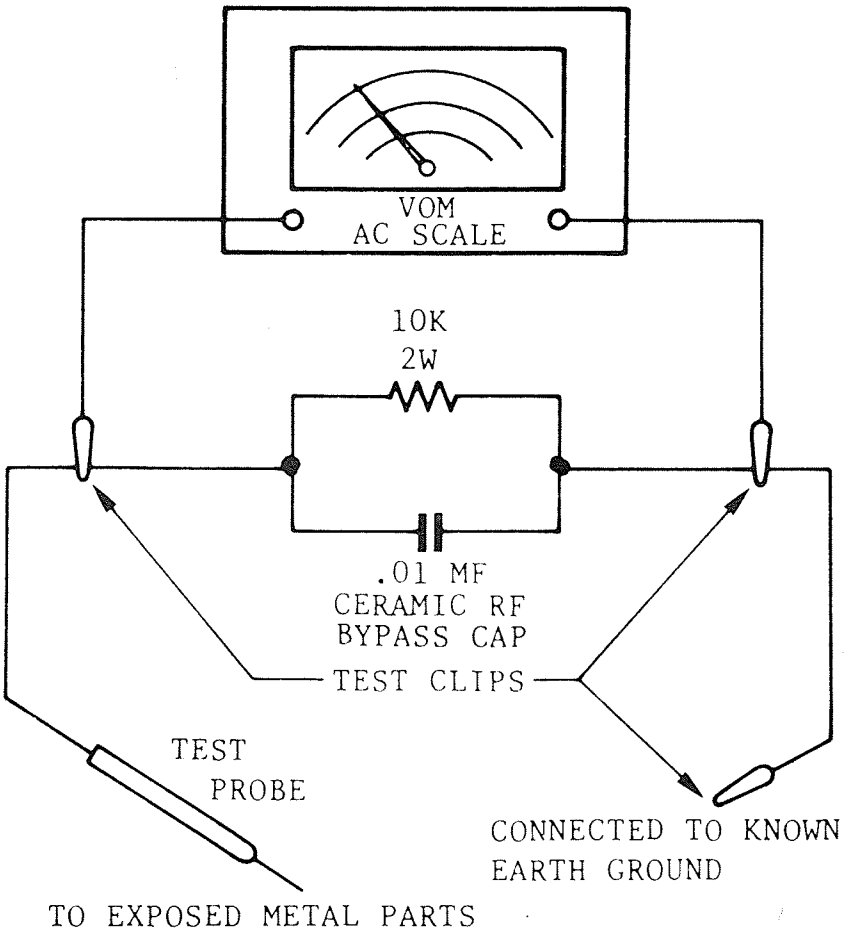

SECTION III
DIAGRAMS & TEST

(INDEX)

FIGURE				PAGE
3-1	B-300 (18550K) BLOCK DIAGRAM			3-3
3-2	B-300 (18550K) WIRING DIAGRAM			3-4
3-3	TONE GENERATOR BOARD SCHEMATIC	(DV-10C)	229-20281	3-5
3-4	TONE GENERATOR BOARD LAYOUT	(DV-10C)	229-20281	3-6
3-4	PERCUSSION SWITCH BOARD LAYOUT	(SW-98)	225-22296	3-6
3-5	SYNTHESIS FILTER & KEY CLICK BOARD SCHEMATIC	(FL-35)	222-16271	3-7
3-6	SYNTHESIS FILTER & KEY CLICK BOARD LAYOUT	(FL-35)	222-16271	3-8
3-6	BASS BOARD LAYOUT	(EF-207A)	223-40206	3-8
3-6	BASS BOARD LAYOUT	(EF-207C)	223-40211	3-8
3-7	BASS BOARD SCHEMATIC	(EF-207A)	223-40206	3-9
3-8	BASS BOARD SCHEMATIC	(EF-207C)	223-40211	3-10
3-9	DEMULTIPLEXER BOARD SCHEMATIC	(TG-25B)	232-11253	3-11
3-10	DEMULTIPLEXER BOARD LAYOUT	(TG-25B)	232-11253	3-12
3-10	MULTIPLEX & BUS AMP. BOARD LAYOUT	(TG-35)	232-12211	3-12
3-11	MULTIPLEX & BUS AMP. BOARD SCHEMATIC	(TG-35)	232-12211	3-13
3-12	PICTORIAL LOGIC BOARD SCHEMATIC & LAYOUT	(LG-25)	220-15251	3-14
3-13	MASTER OSCILLATOR BOARD SCHEMATIC & LAYOUT	(MG-21)	228-19266	3-15
3-14	TONE BAR PRESET SWITCH BOARD SCHEMATIC	(SW-97)	225-22291	3-16
3-15	TONE BAR PRESET SWITCH BOARD LAYOUT	(SW-97)	225-22291	3-17
3-16	PERCUSSION SWITCH BOARD SCHEMATIC	(SW-98)	225-22296	3-18
3-17	BASS SWITCH BOARD SCHEMATIC	(SW-90)	225-22256	3-19
3-18	BASS SWITCH BOARD LAYOUT	(SW-90)	225-22256	3-20
3-18	STRING CONTROL BOARD LAYOUT	(SW-99)	225-23201	3-20
3-18	LESLIE SWITCH BOARD LAYOUT	(SW-100)	225-23206	3-20
3-19	STRING CONTROL BOARD SCHEMATIC	(SW-99)	225-23201	3-21
3-20	STRING ENSEMBLE BORD SCHEMATIC	(EF-88A)	223-39212	3-22
3-21	STRING ENSEMBLE BOARD LAYOUT	(EF-88A)	223-39212	3-23
3-21	PRESET BOARD LAYOUT	(EF-209)	223-40221	3-23
3-22	PRESET BOARD SCHEMATIC	(EF-209)	223-40221	3-24
3-23	OUTPUT BOARD SCHEMATIC	(PA-46)	219-52276	3-25
3-24	OUTPUT BOARD LAYOUT	(PA-46)	219-52276	3-26
3-24	EXPRESSION BOARD SCHEMATIC & LAYOUT	(EF-208B)	223-40216	3-26
3-25	POWER SUPPLY BOARD SCHEMATIC & LAYOUT	(PS-54C)	224-16258 (220V~240V) 224-16261 (120V) 224-16264 (100V)	3-27
3-26	REVERB AMP. BOARD SCHEMATIC & LAYOUT	(RA-1C)	223-36213A	3-28
3-27	LESLIE SWITCH BOARD SCHEMATIC	(SW-100)	225-23206	3-29
3-28	FRONT STRIP SWITCH BOARD SCHEMATIC & LAYOUT	(SW-201)	225-23211	3-30

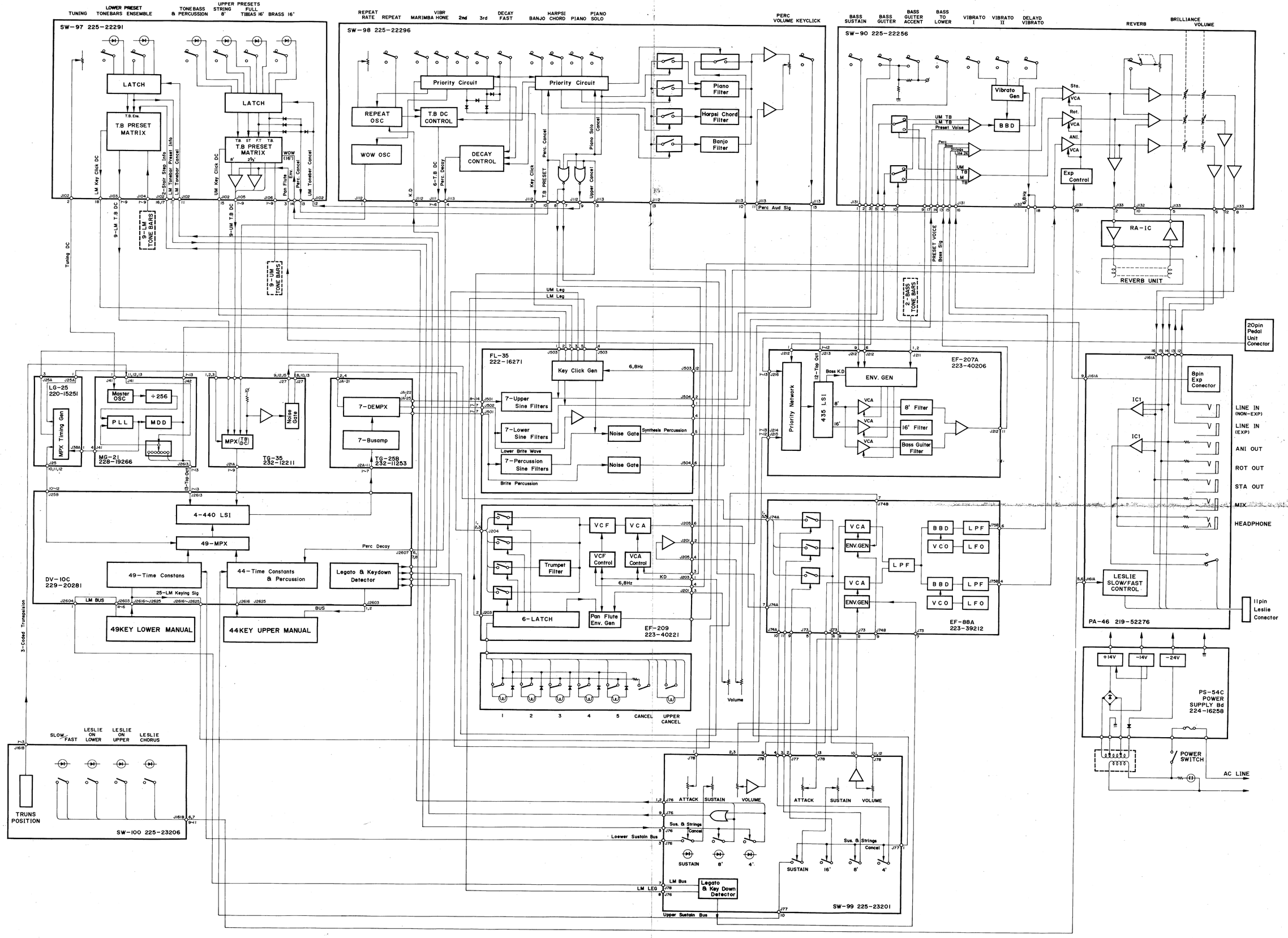

B-300 BLOCK DIAGRAM

FIGURE 3-1
B-300 (18550K)
BLOCK DIAGRAM

B-300(18550K) WIRING DIAGRAM

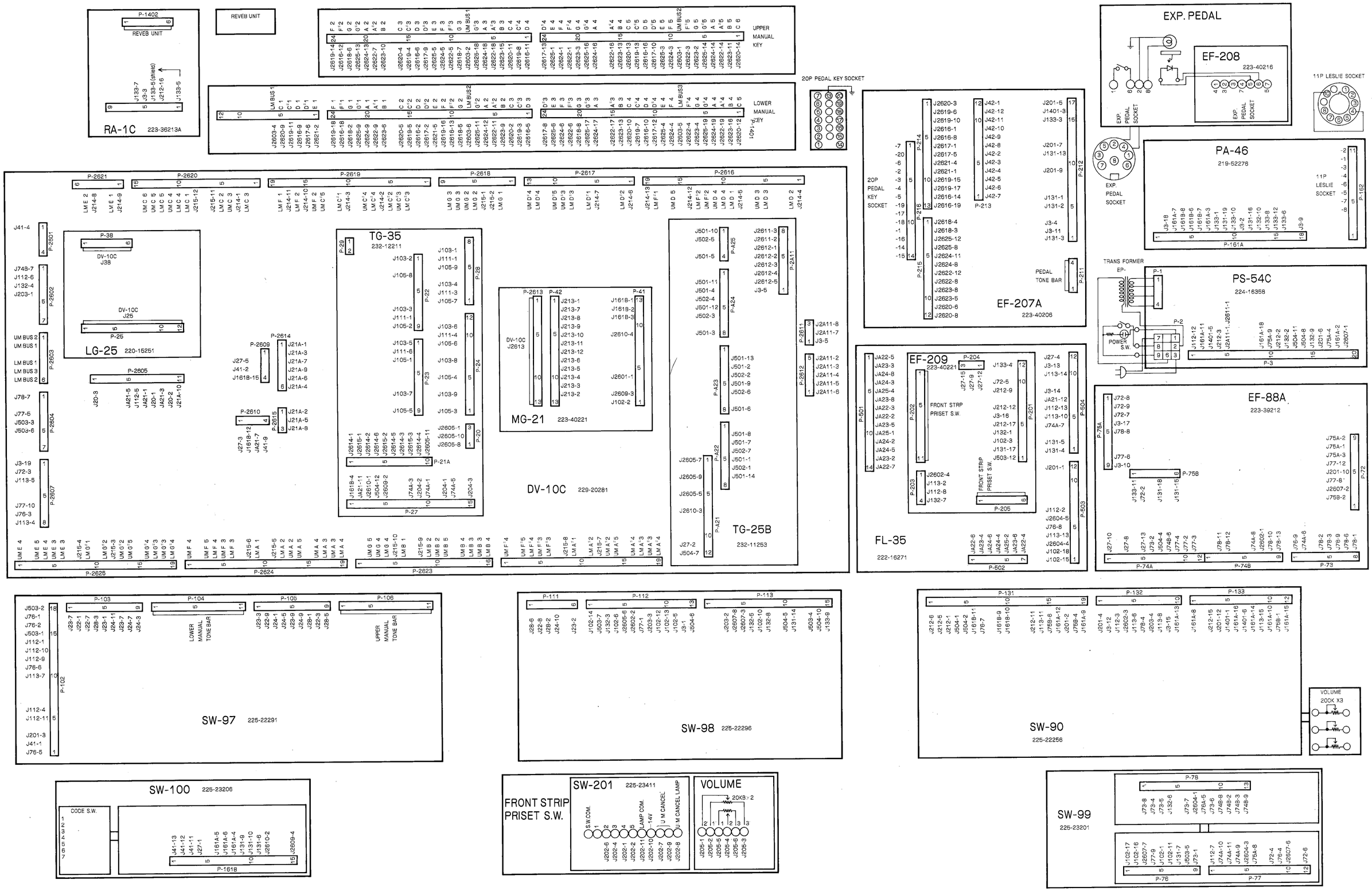

FIGURE 3-2
B-300 (18550K)
WIRING DIAGRAM

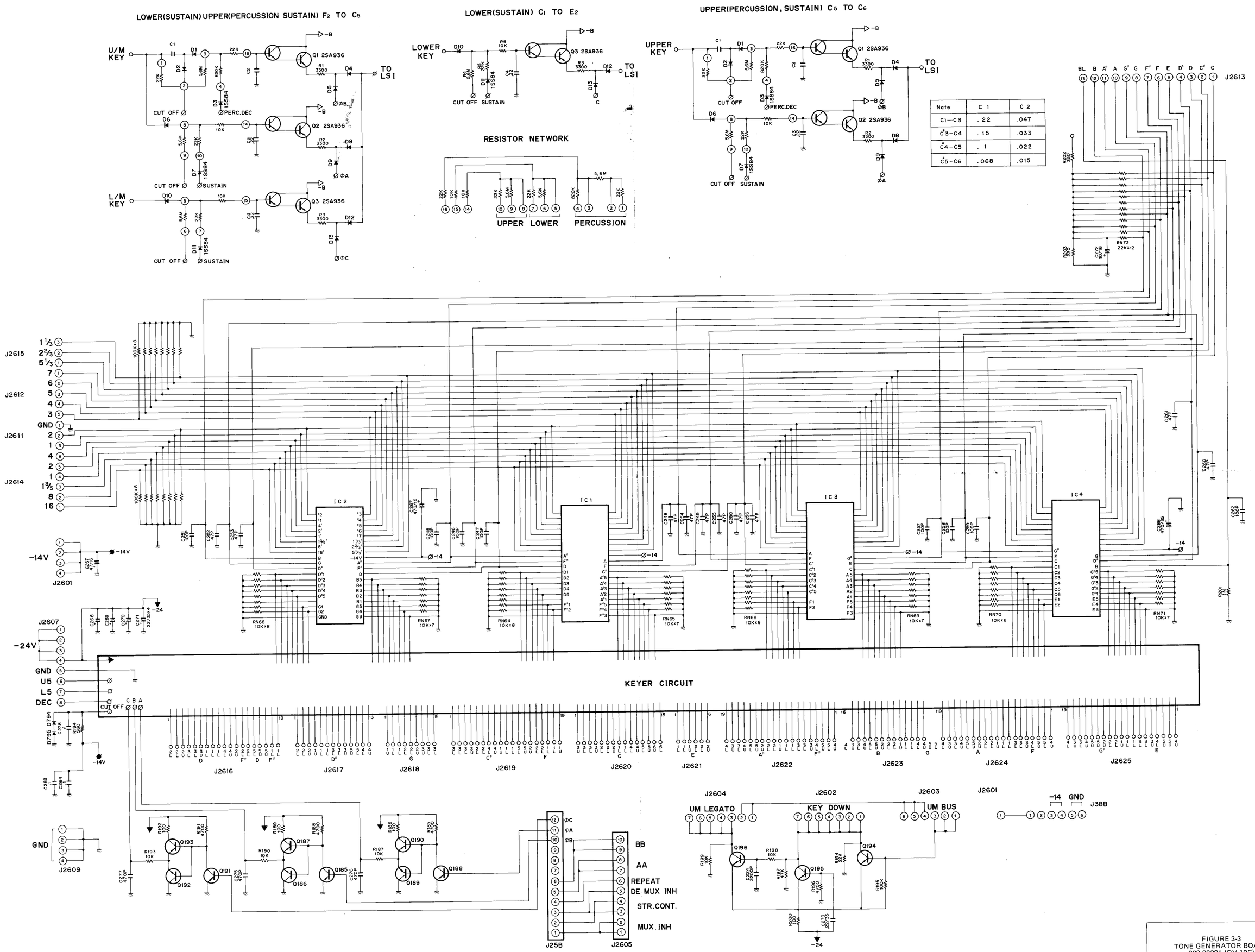

Note	C 1	C 2
C1—C3	.22	.047
C#3—C4	.15	.033
C#4—C5	.1	.022
C#5—C6	.068	.015

FIGURE 3-3
TONE GENERATOR BOARD
229-20281 (DV-10C)
SCHEMATIC

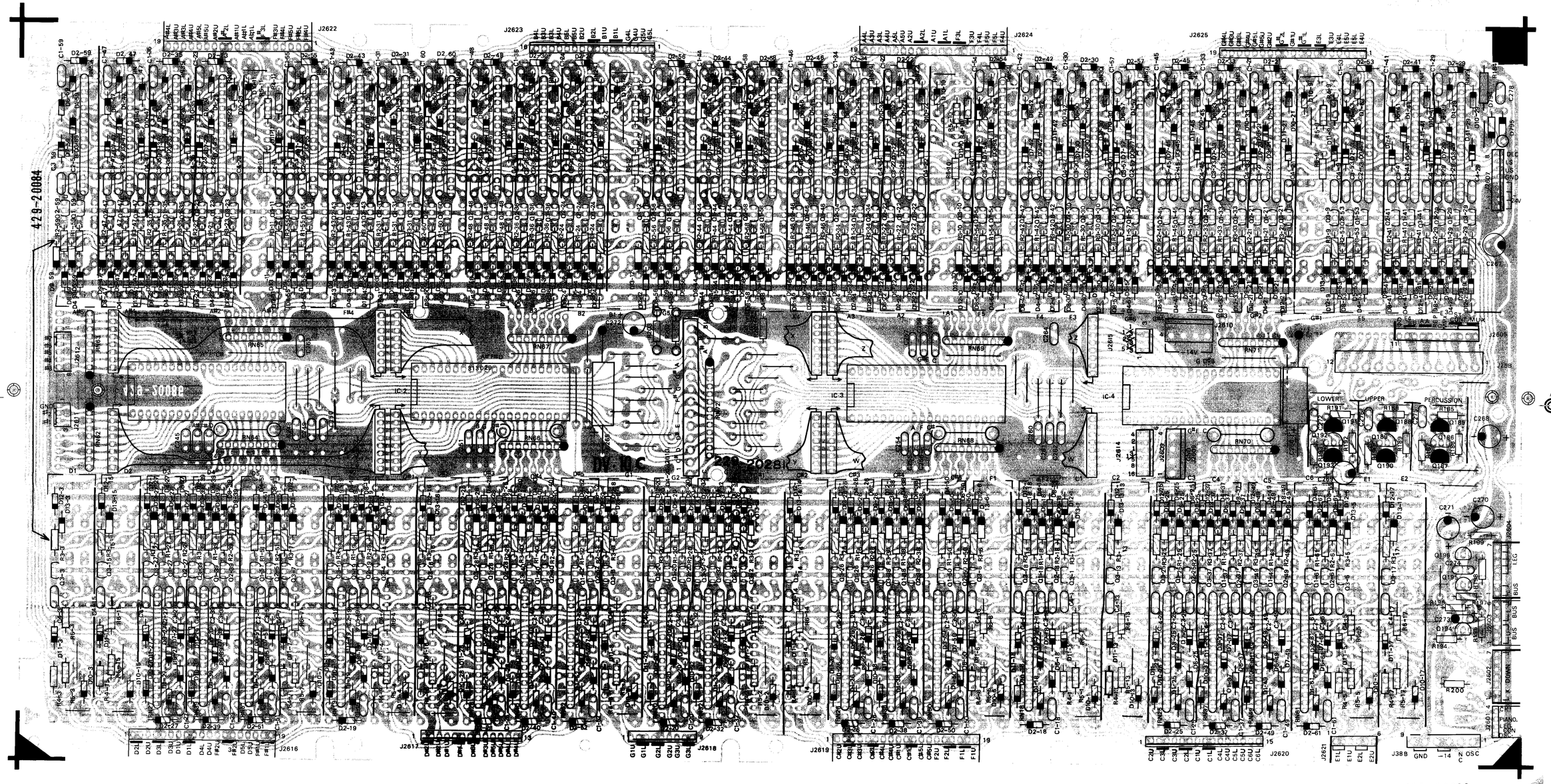

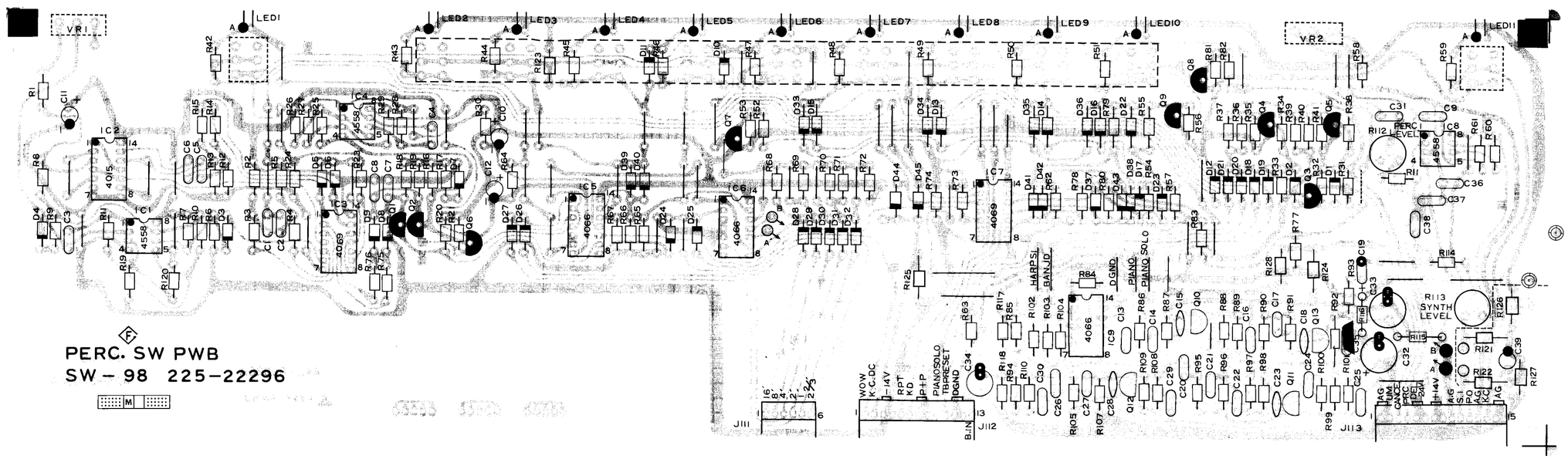

FIGURE 3-4
TONE GENERATOR BOARD
229-20281 (DV-10C)
PERCUSSION SWITCH BOARD
225-22296 (SW-98)
LAYOUT

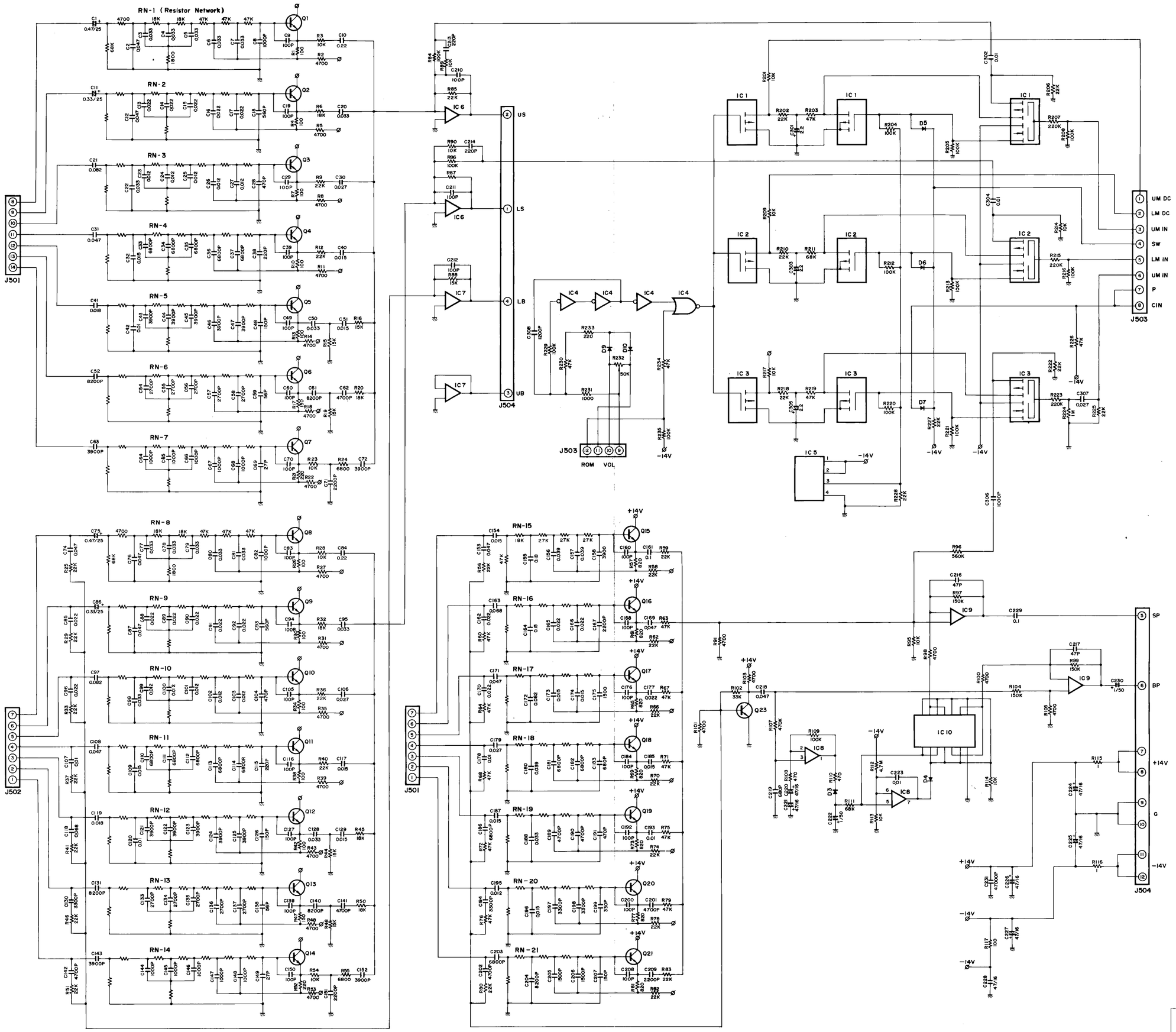

FIGURE 3-5
SYNTHESIS FILTER
& KEY CLICK BOARD
222-16271 (FL-35)
SCHEMATIC

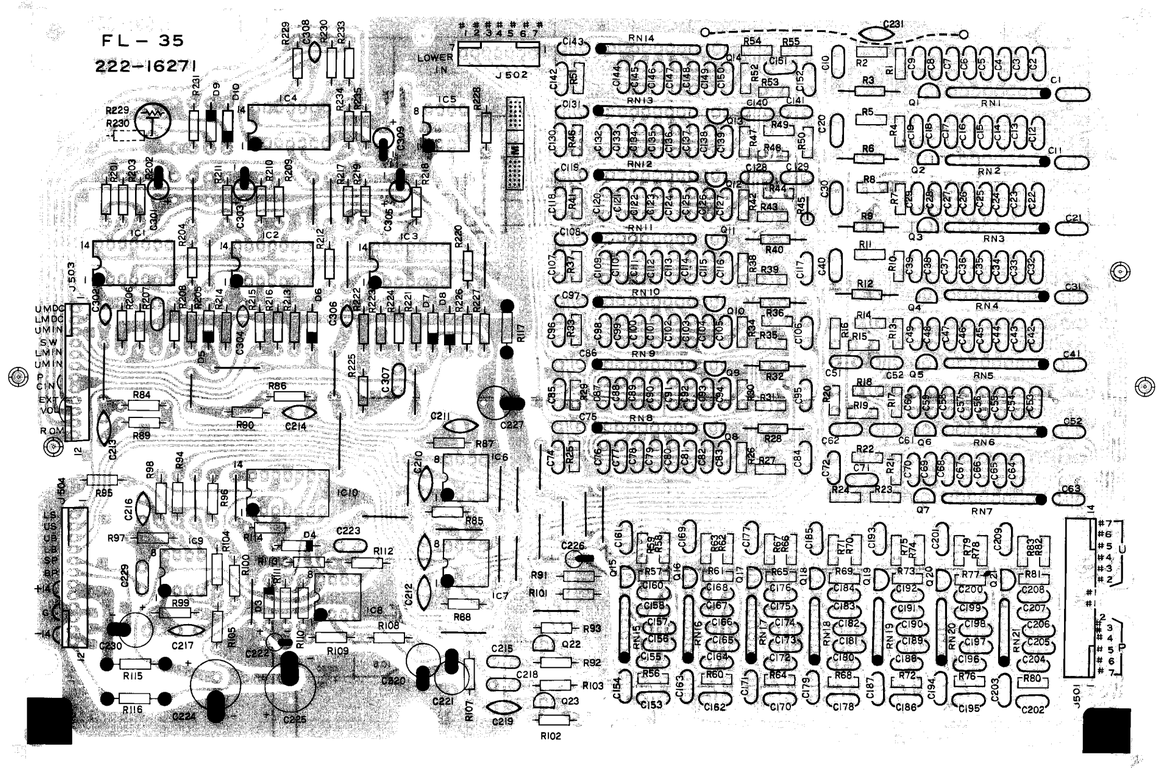

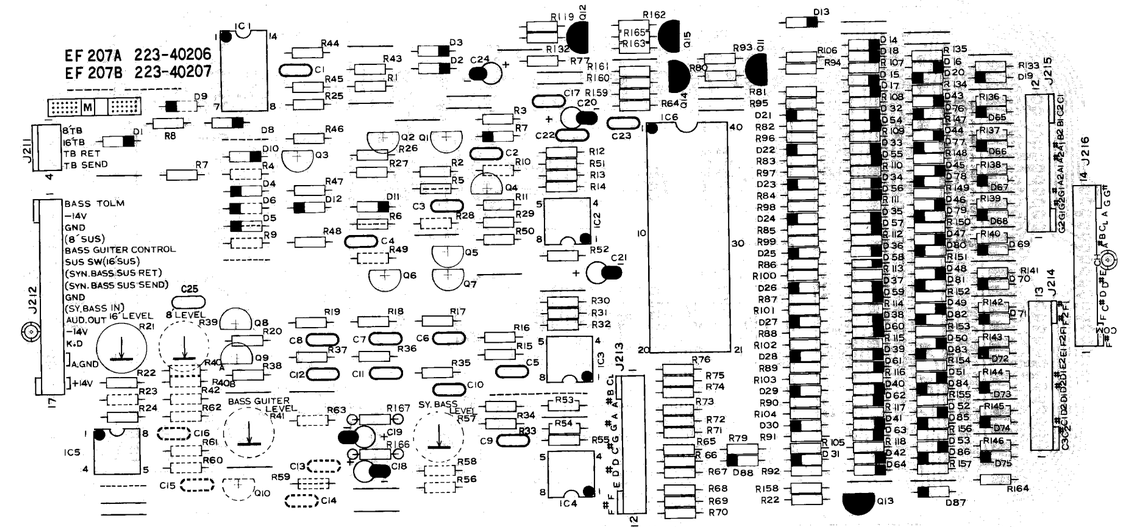

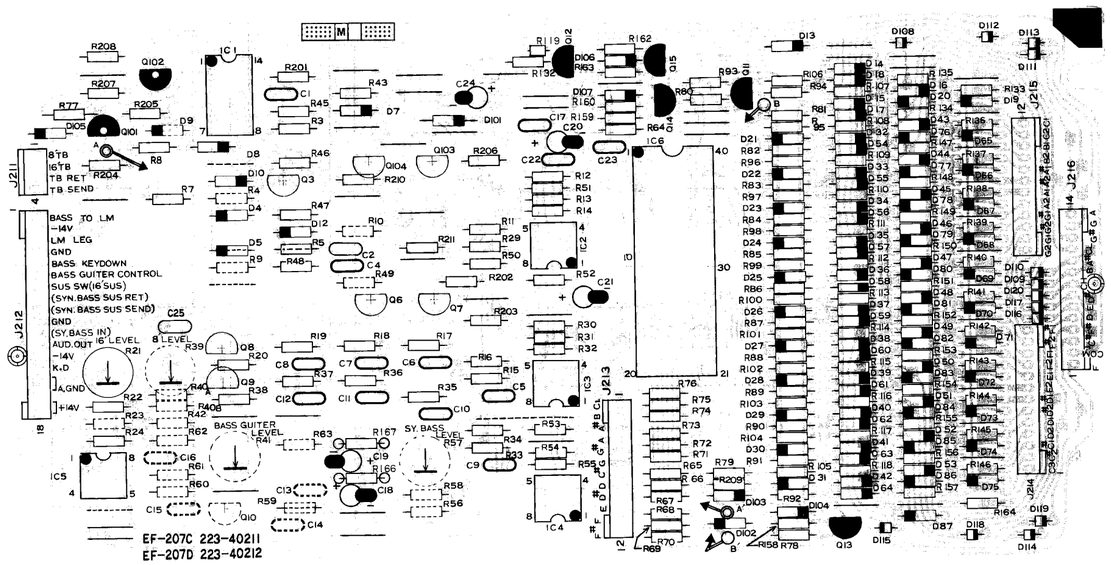

FIGURE 3-6
SYNTHESIS FILTER
& KEY CLICK BOARD
222-16271 (FL-35)
BASS BOARD
223-40206 (EF-207A)
223-40211 (EF-207C)
LAYOUT

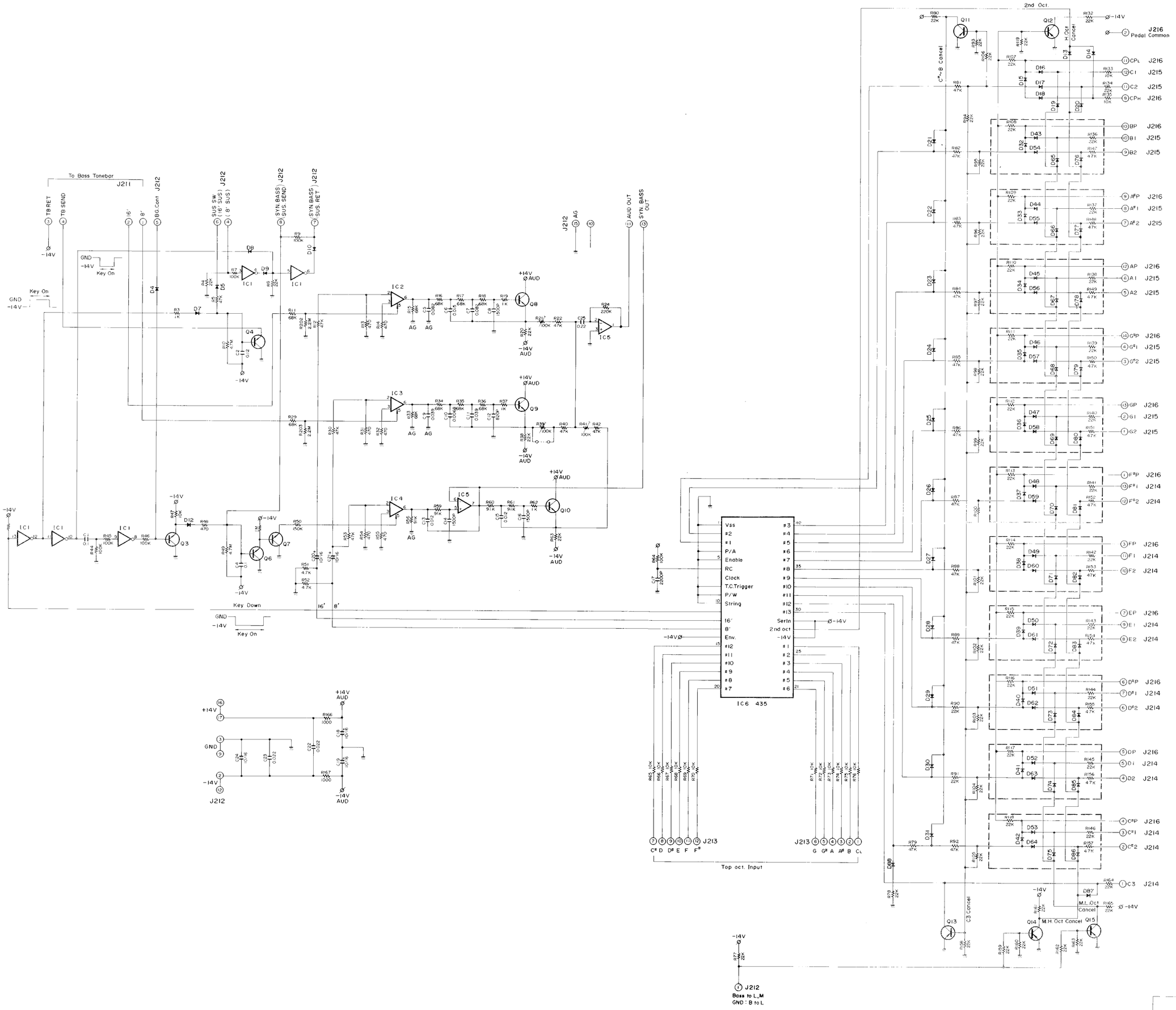

FIGURE 3-7
BASS BOARD
223-40206 (EF-207A)
SCHEMATIC

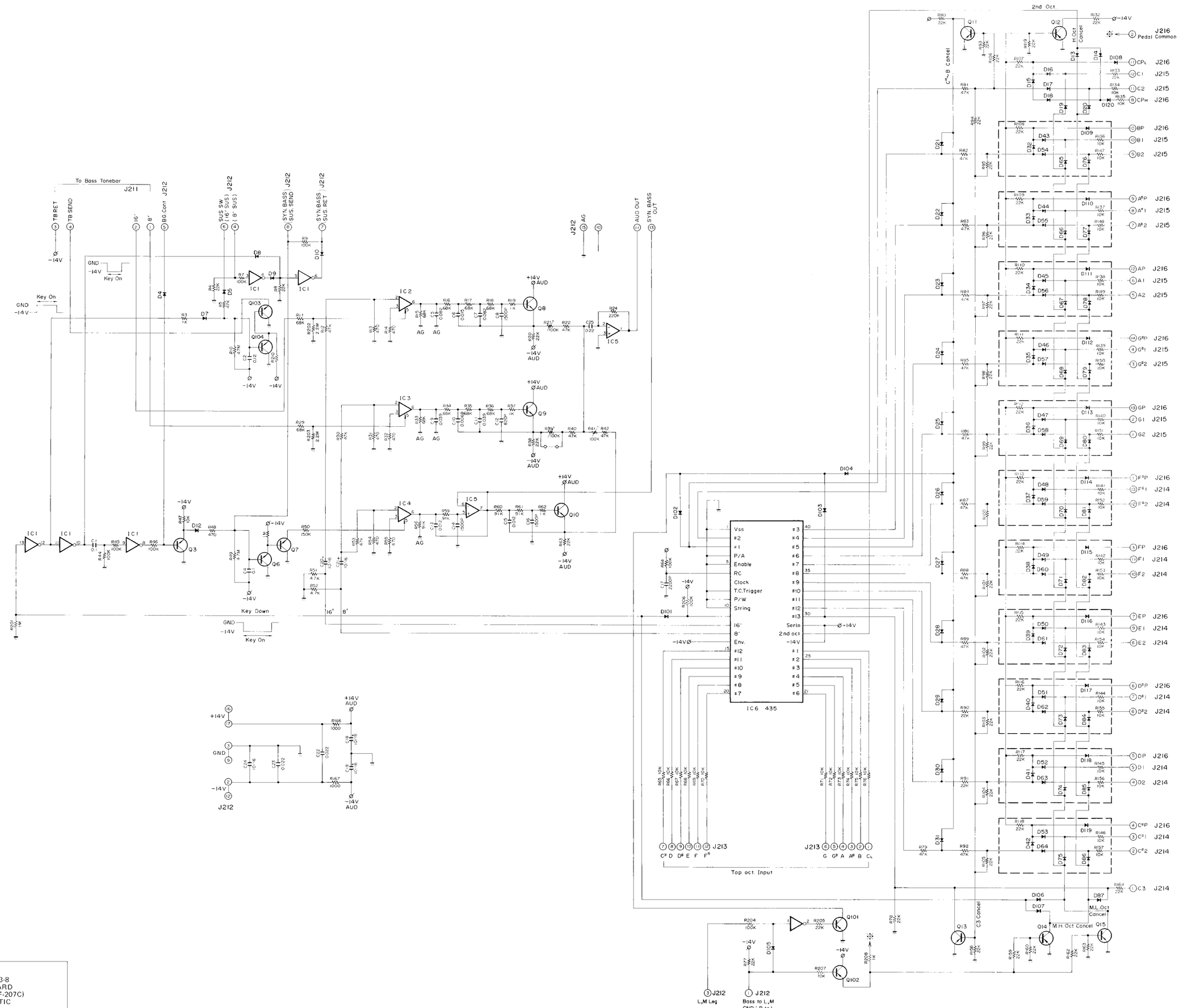

FIGURE 3-8
BASS BOARD
223-40211 (EF-207C)
SCHEMATIC

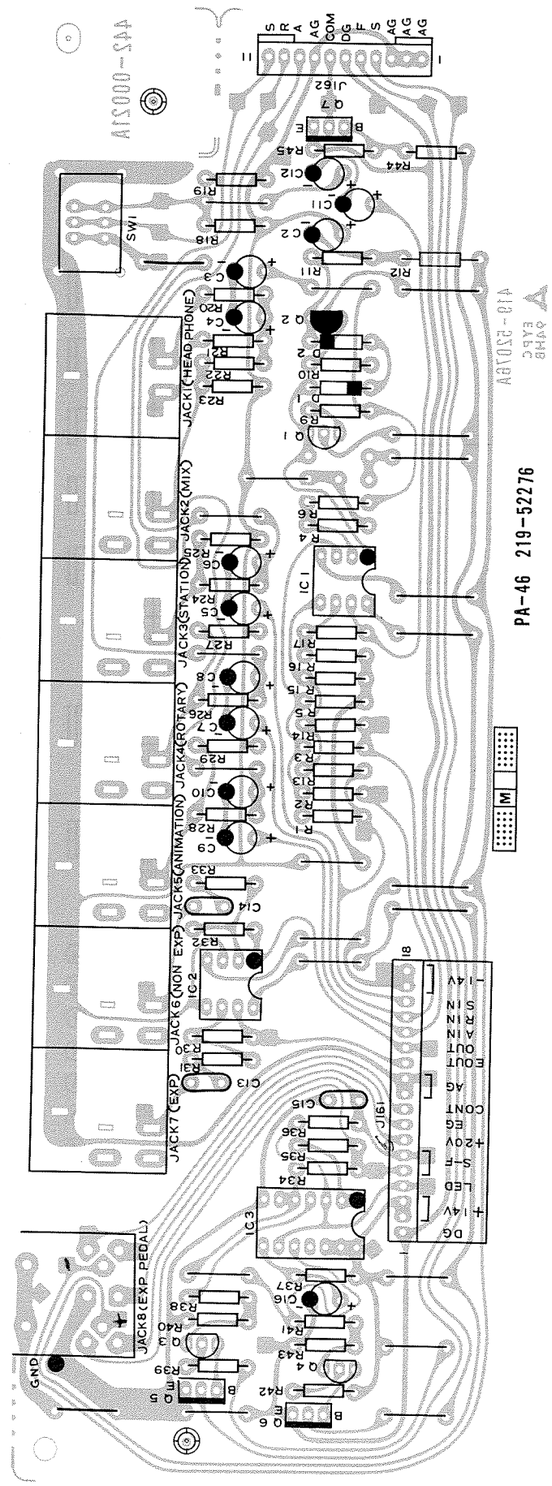

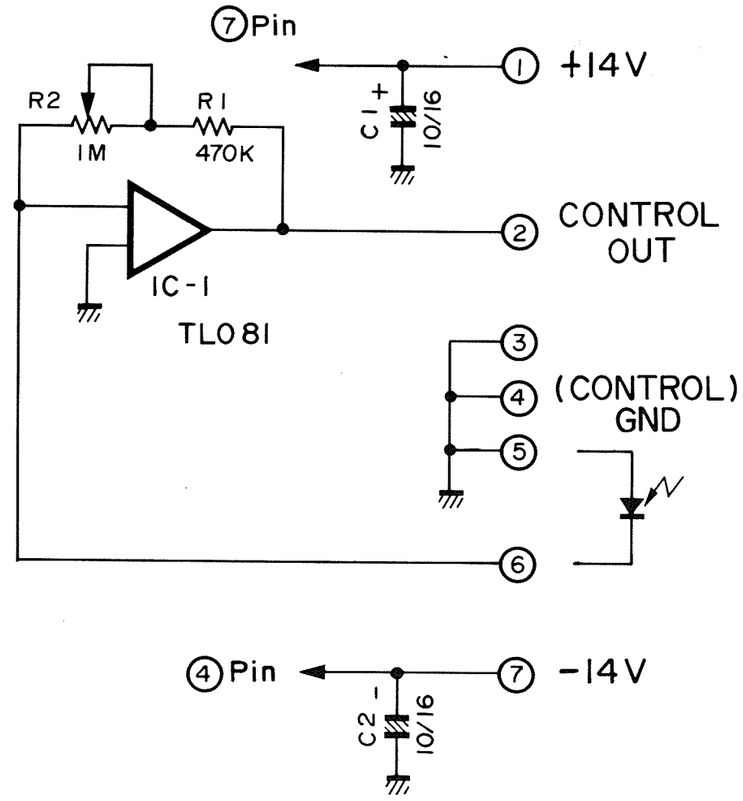

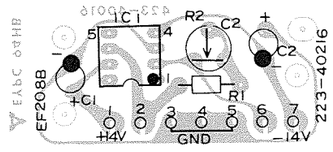

FIGURE 3-24
OUTPUT BOARD
219-52276 (PA-46)
LAYOUT
EXPRESSION BOARD
223-40216 (EF-208B)
SCHEMATIC & LAYOUT

DESIGNATION	PART NO	DESCRIPTION
IC1 thru 4	319-06013	CD4052BE
Q1 thru 14	305-01043	2SA842BL
Q15 thru 17	305-03073	2SC1681BL

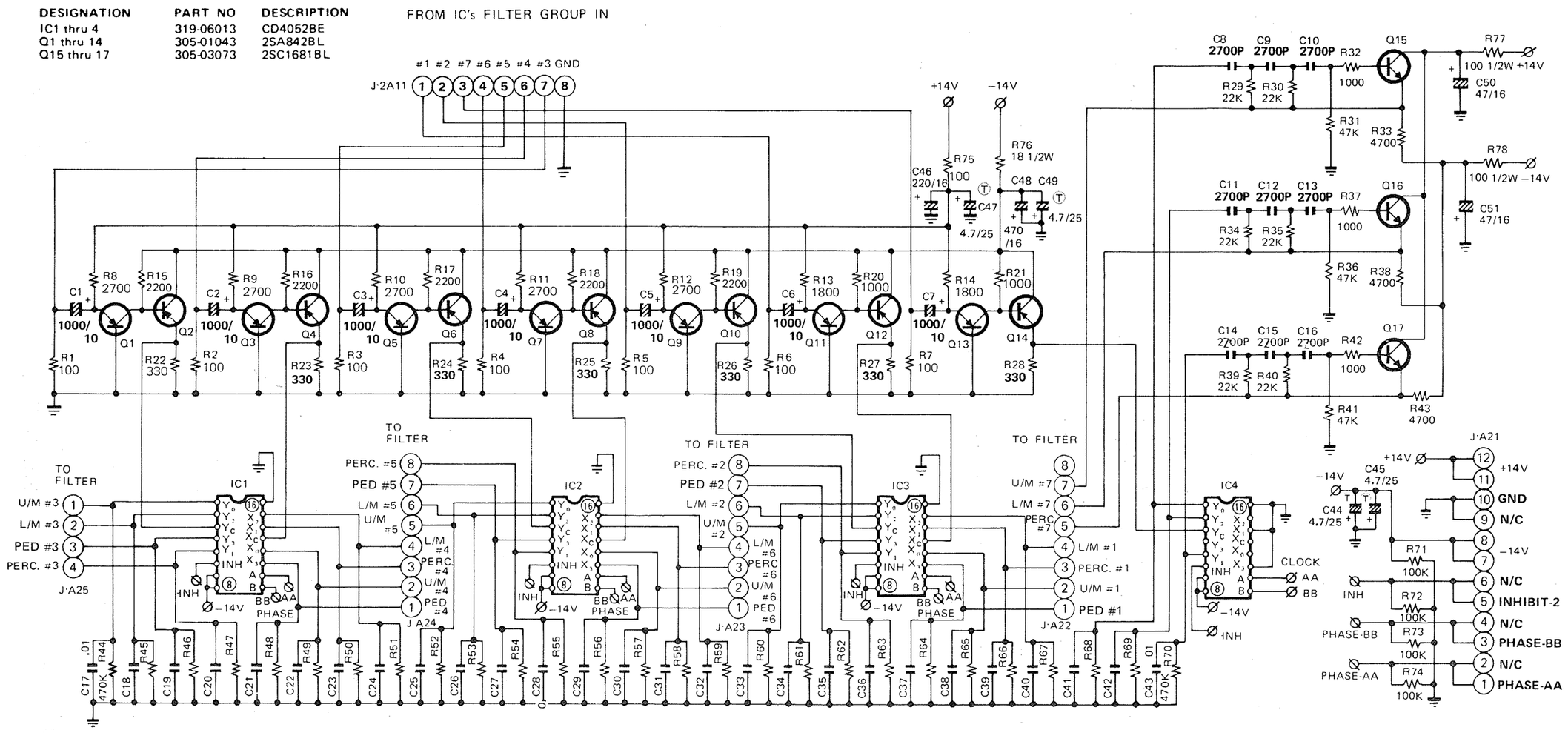

FIGURE 3-9
DEMULTIPLEXER BOARD
232-11253 (TG-25B)
SCHEMATIC

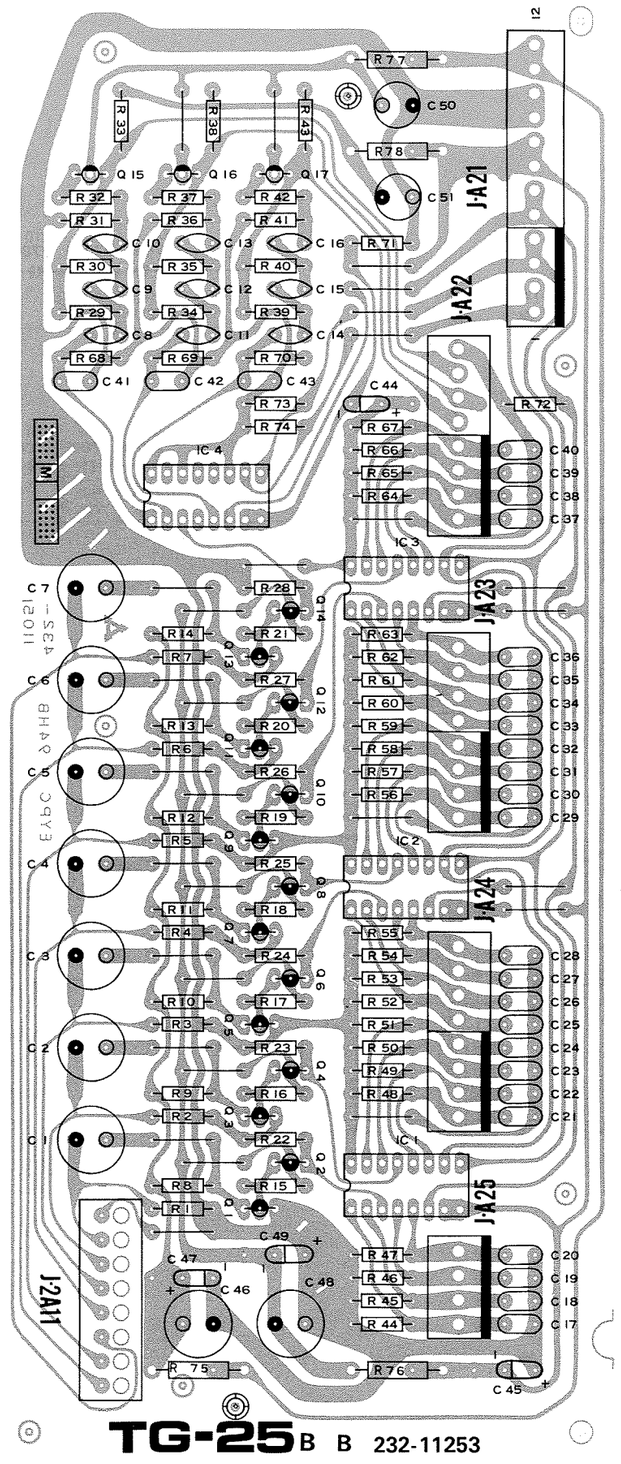

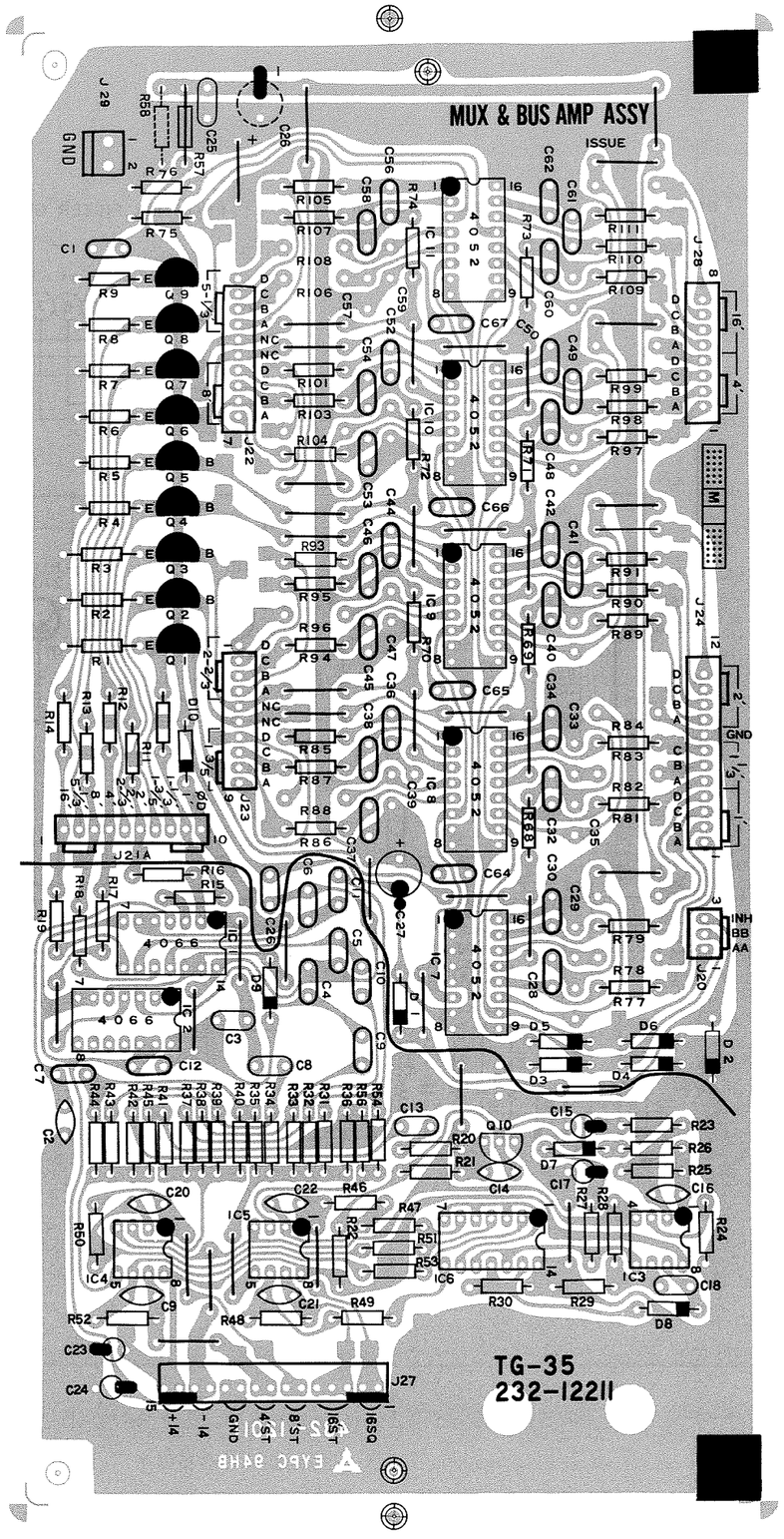

FIGURE 3-10
DEMULTIPLEXER BOARD
232-11253 (TG-25B)
MULTIPLEX & BUS AMP. BOARD
232-12211 (TG-35)
LAYOUT

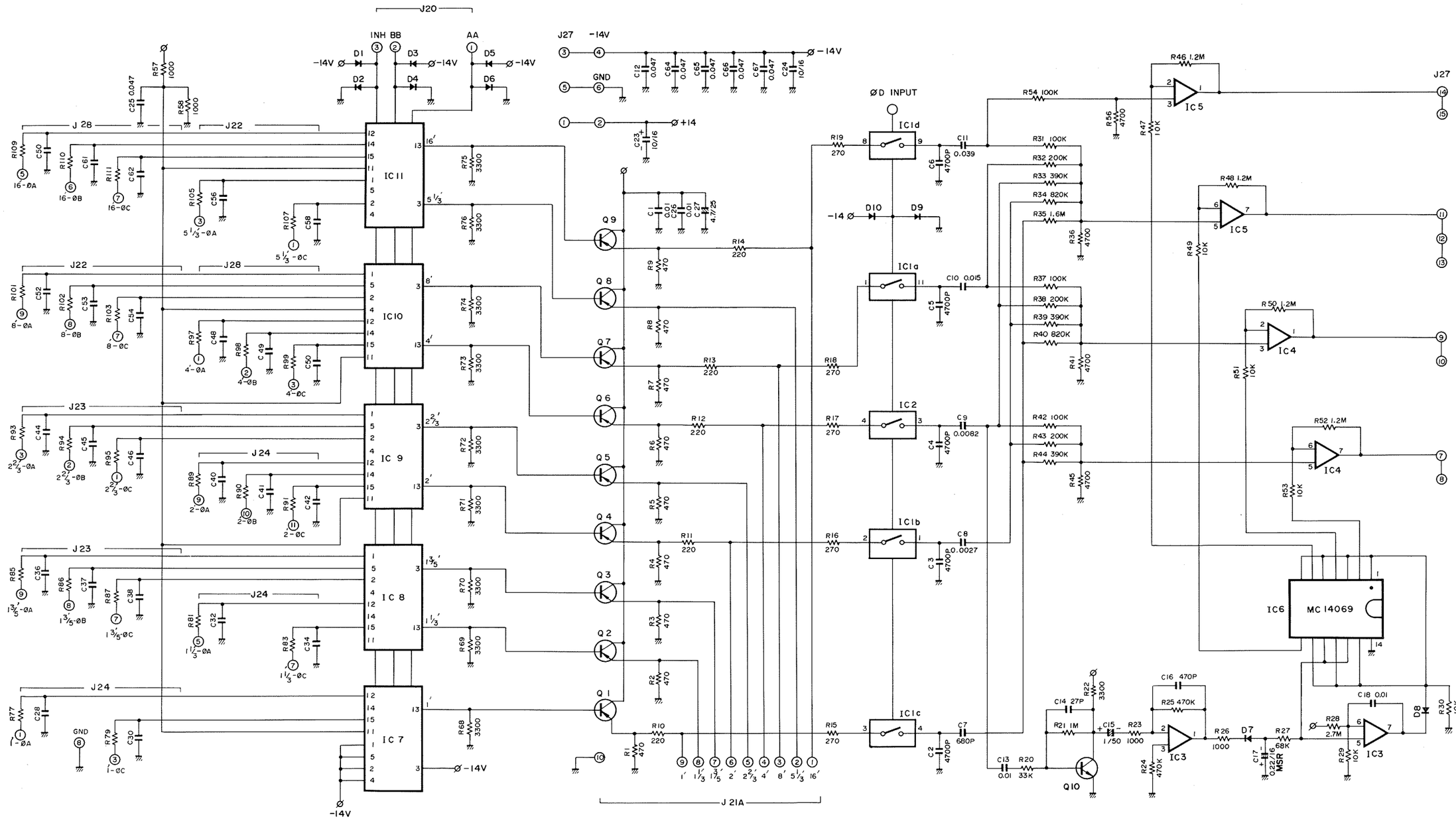

FIGURE 3-11
MULTIPLEX & BUS AMP. BOARD
232-12211 (TG-35)
SCHEMATIC

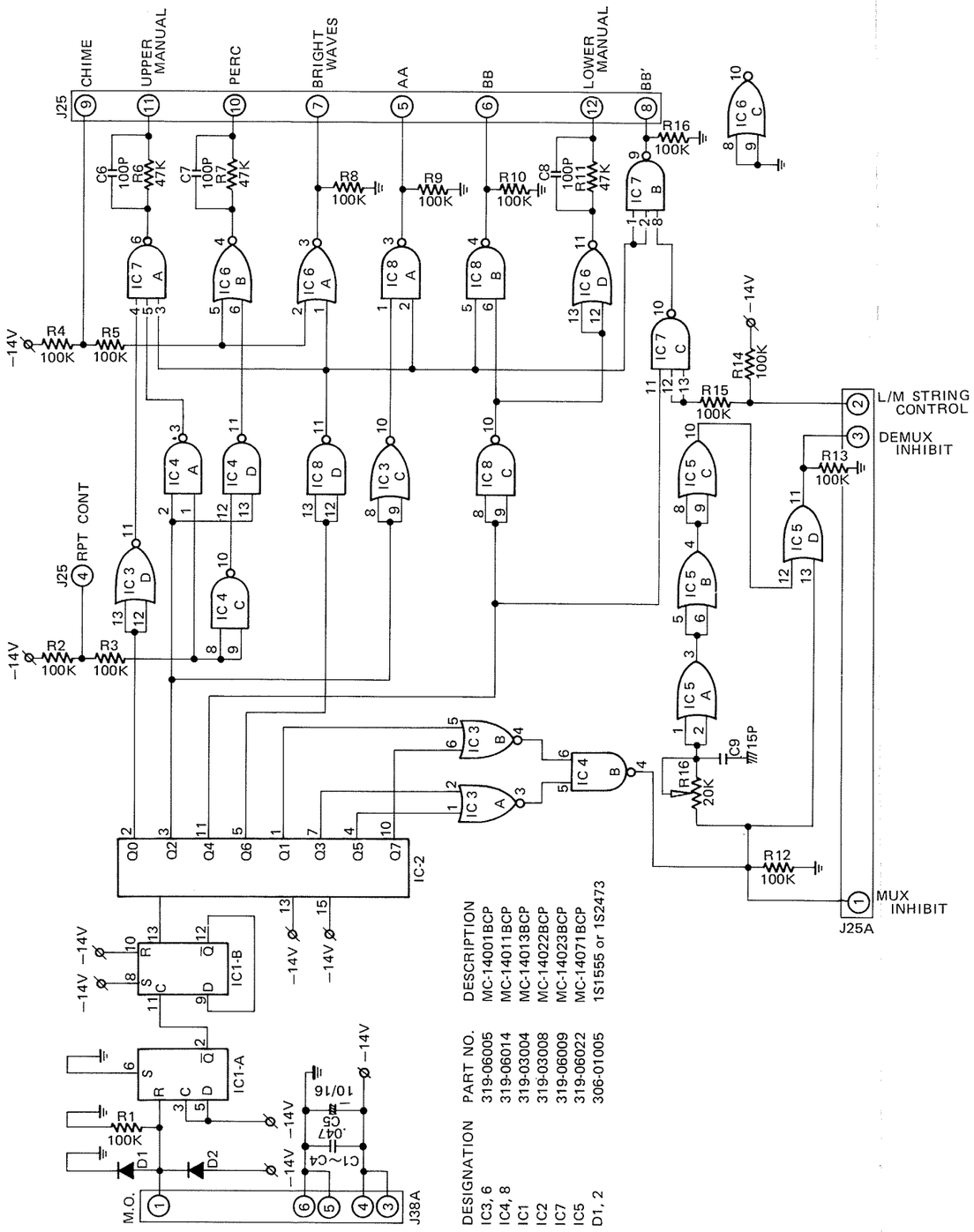

DESIGNATION	PART NO.	DESCRIPTION
IC3, 6	319-06005	MC-14001BCP
IC4, 8	319-06014	MC-14011BCP
IC1	319-03004	MC-14013BCP
IC2	319-03008	MC-14022BCP
IC7	319-06009	MC-14023BCP
IC5	319-06022	MC-14071BCP
D1, 2	306-01005	1S1555 or 1S2473

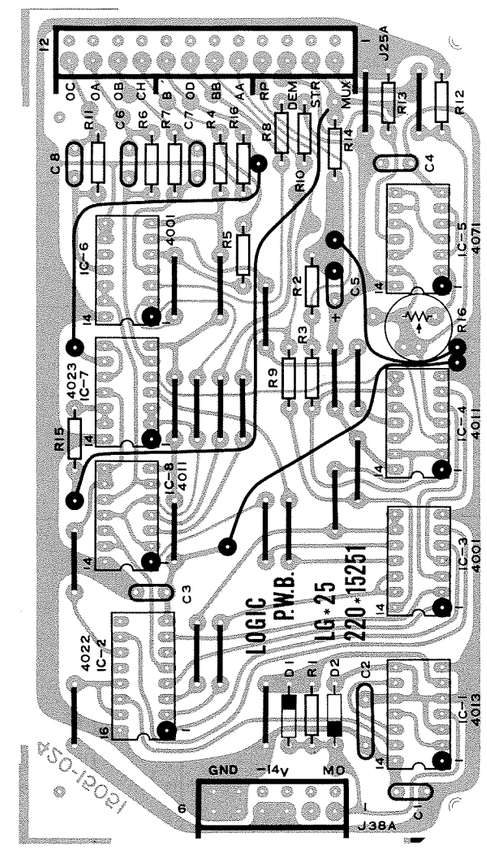

FIGURE 3-12
PICTORIAL LOGIC BOARD
220-15251 (LG-25)
SCHEMATIC & LAYOUT

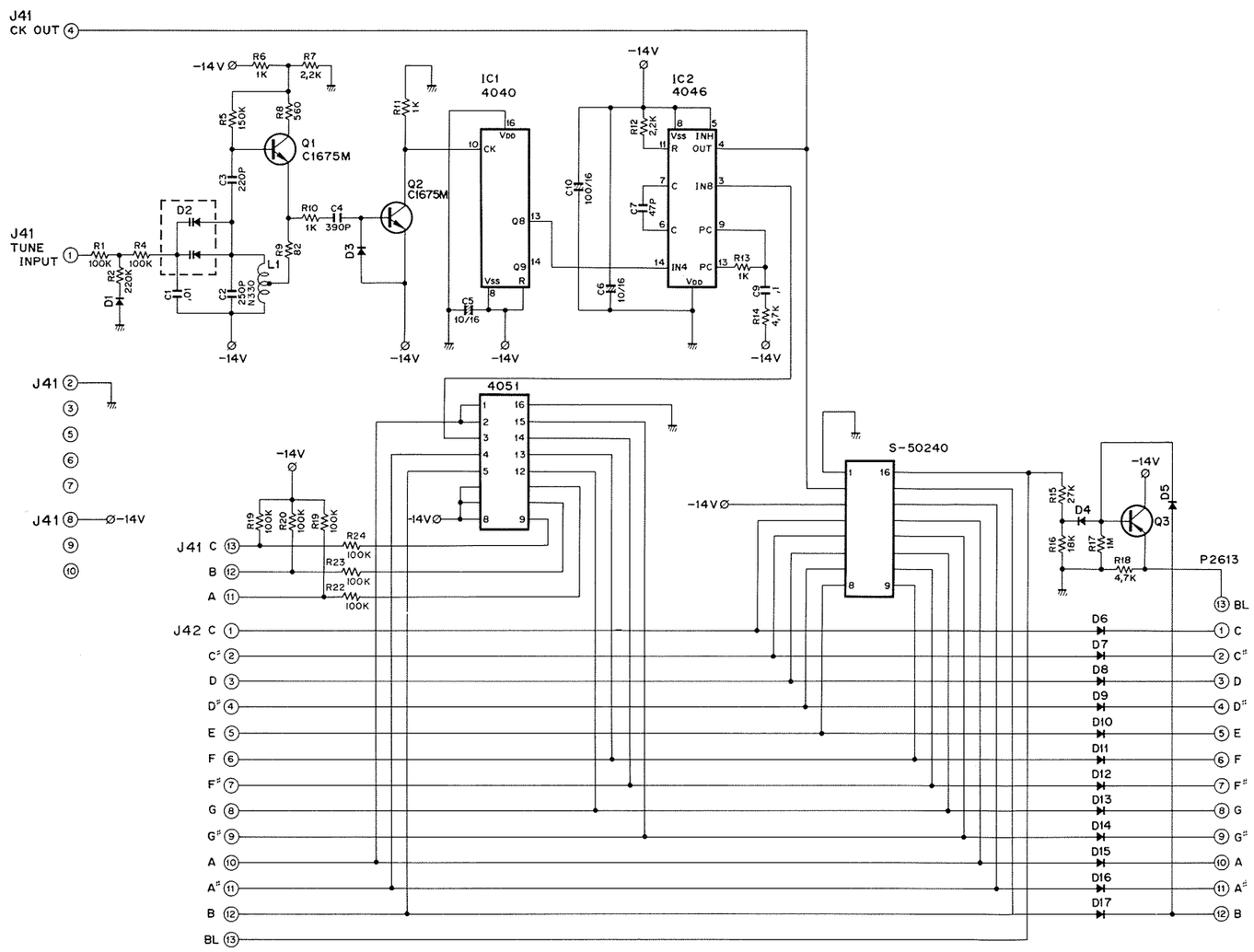

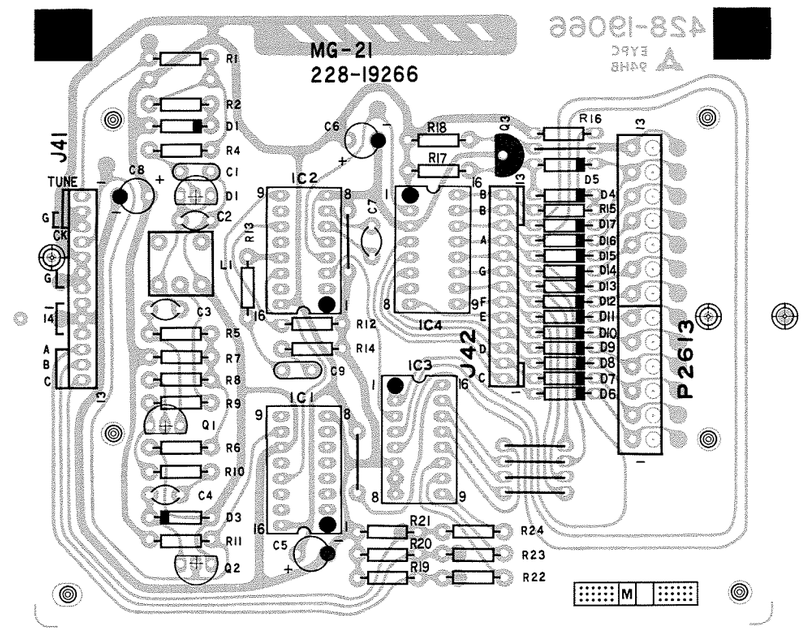

FIGURE 3-13
MASTER OSCILLATOR BOARD.
228-19266 (MG-21)
SCHEMATIC & LAYOUT

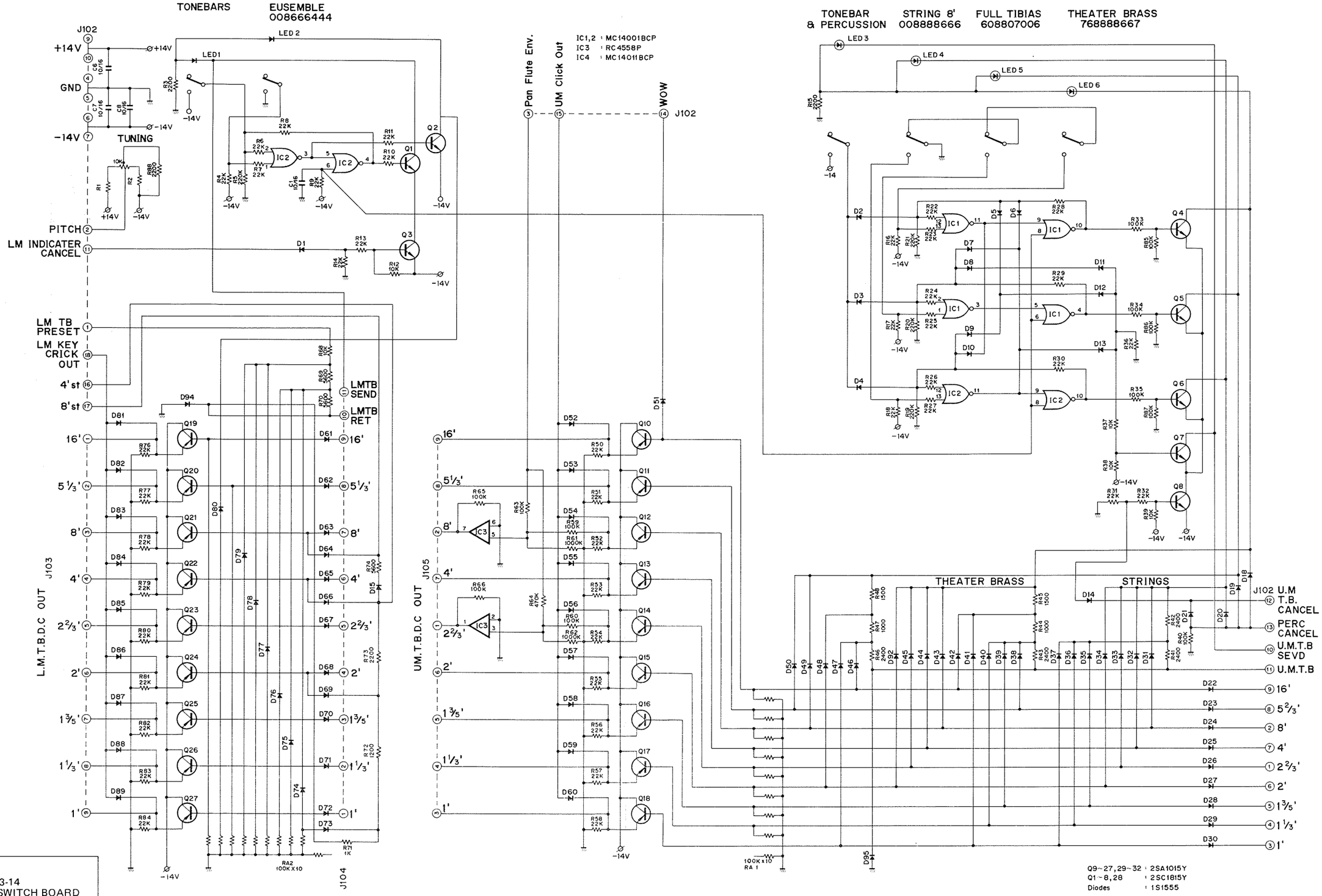

FIGURE 3-14
TONE BAR PRESET SWITCH BOARD
225-22291 (SW-97)
SCHEMATIC

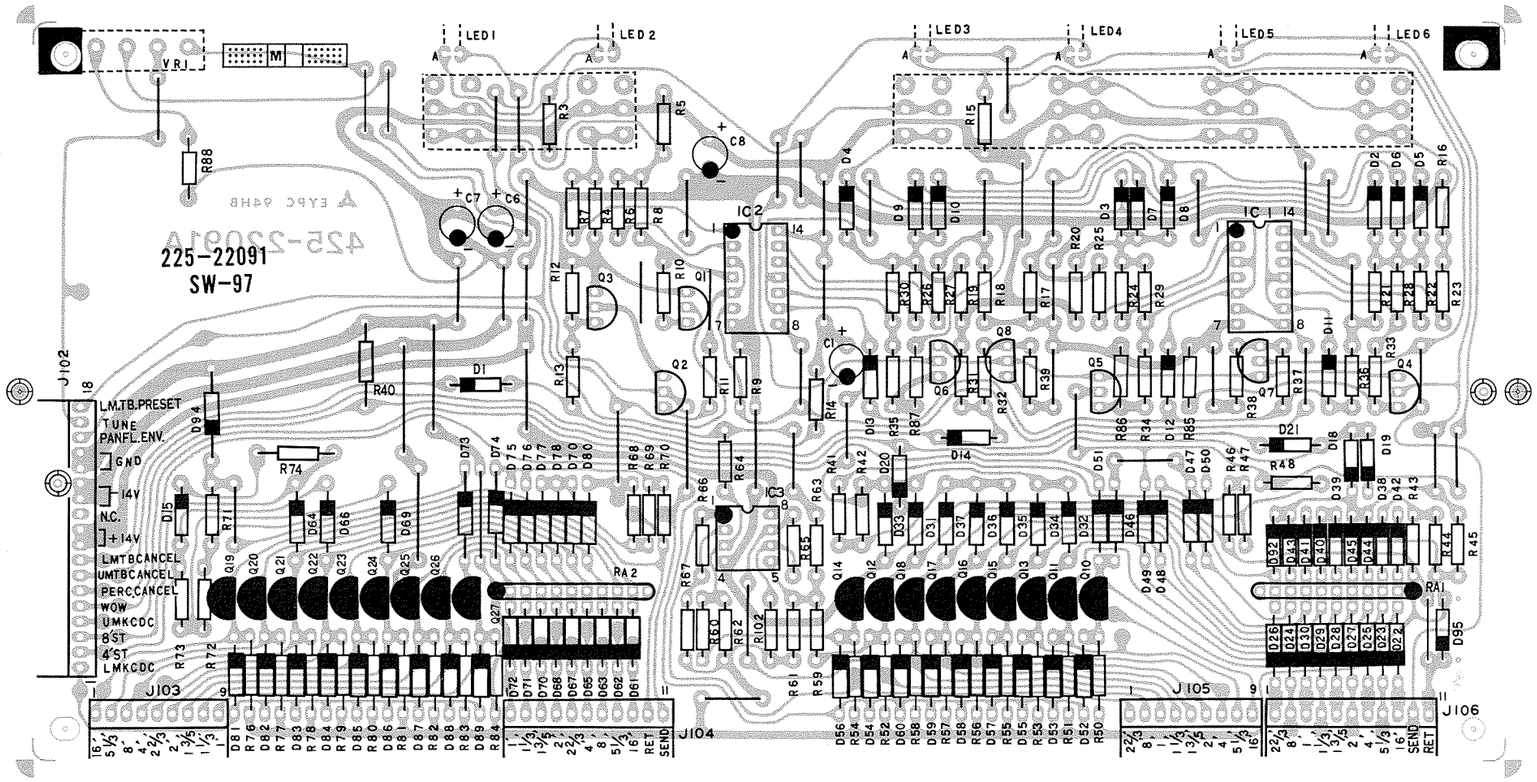

FIGURE 3-15
TONE BAR PRESET SWITCH BOARD
225-22291 (SW-97)
LAYOUT

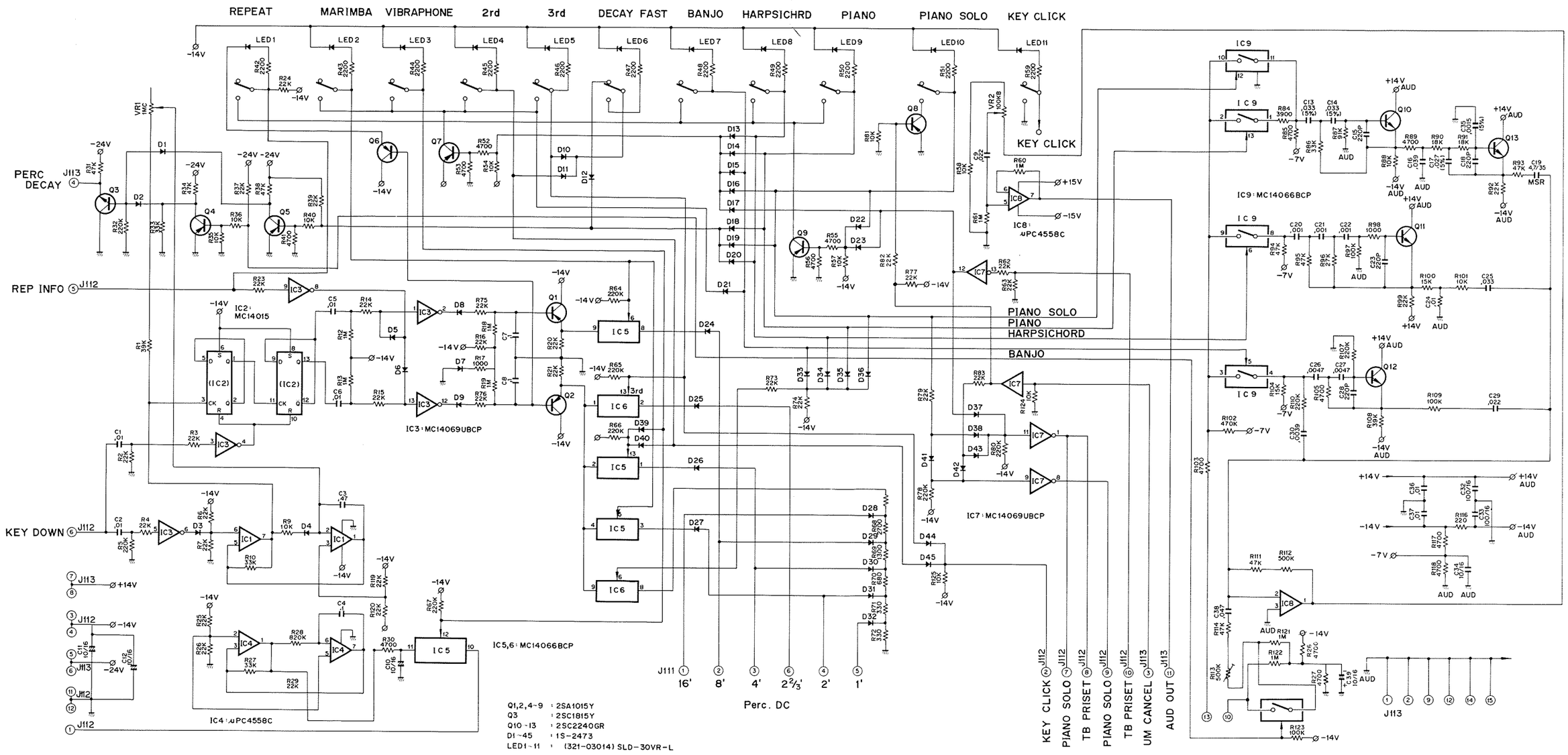

FIGURE 3-16
PERCUSSION SWITCH BOARD
225-22296 (SW-98)
SCHEMATIC

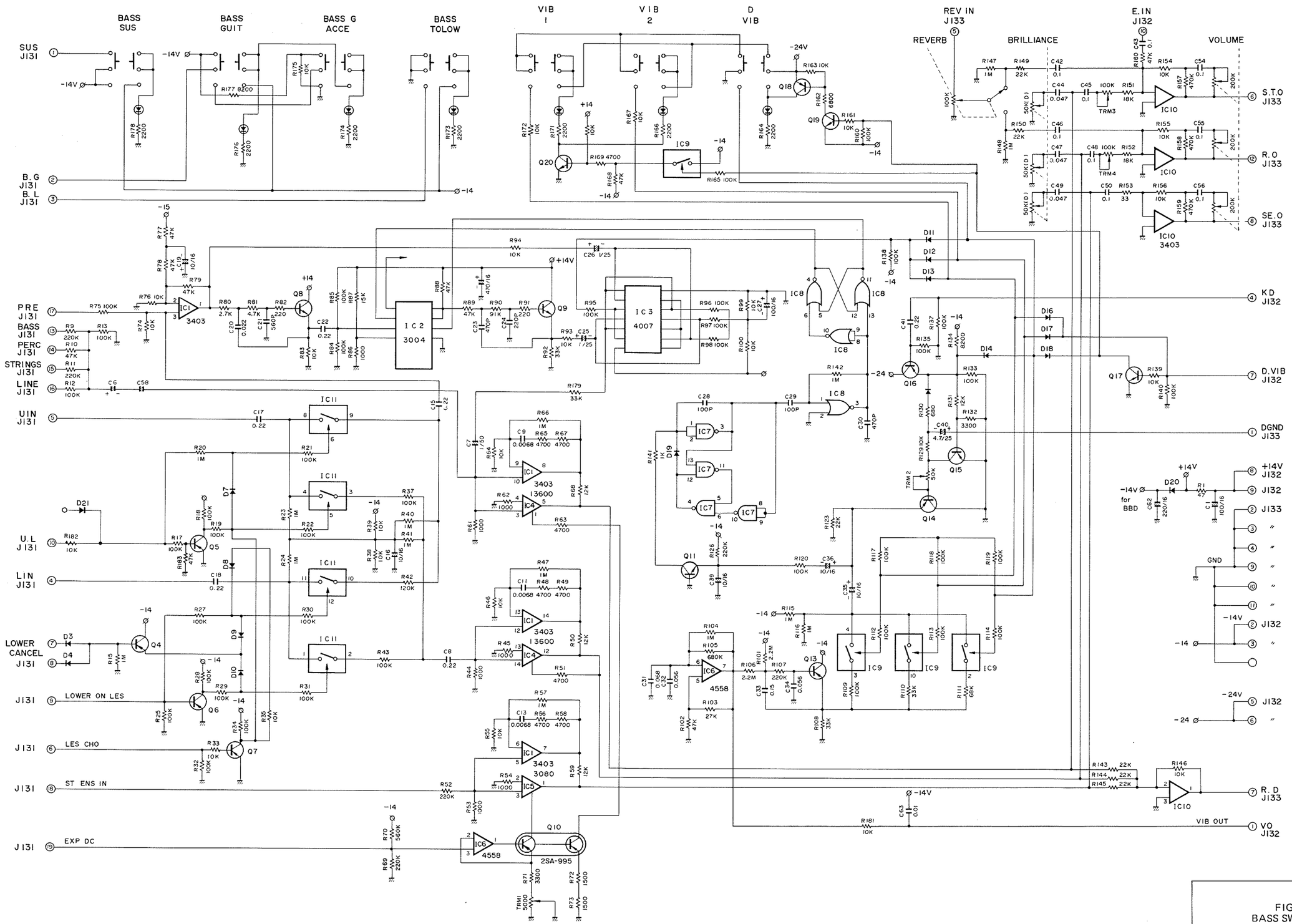

FIGURE 3-17
BASS SWITCH BOARD
225-22256 (SW-90)
SCHEMATIC

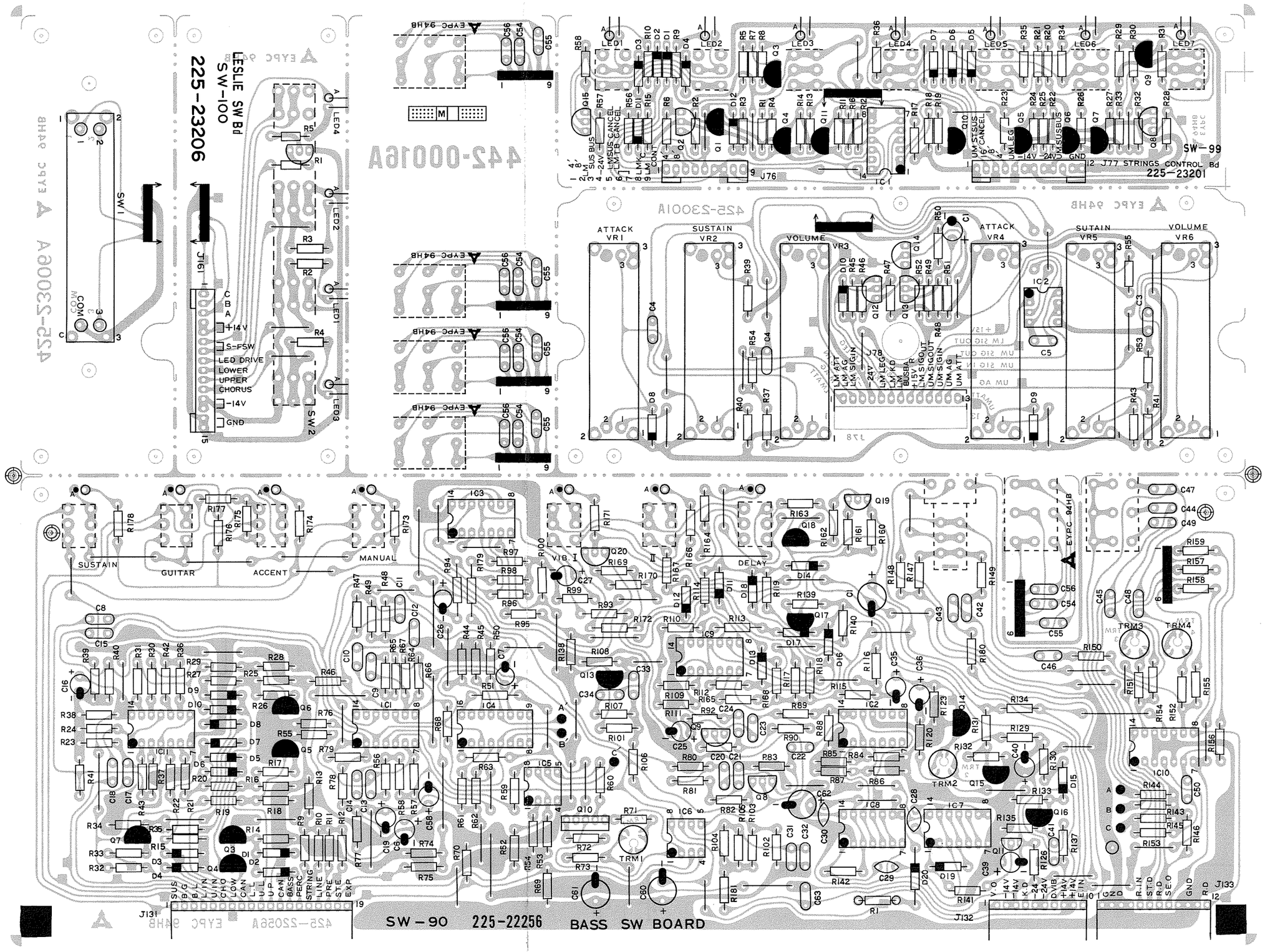

FIGURE 3-18
BASS SWITCH BOARD
225-22256 (SW-90)
STRING CONTROL BOARD
225-23201 (SW-99)
LESLIE SWITCH BOARD
225-23206 (SW-100)
LAYOUT

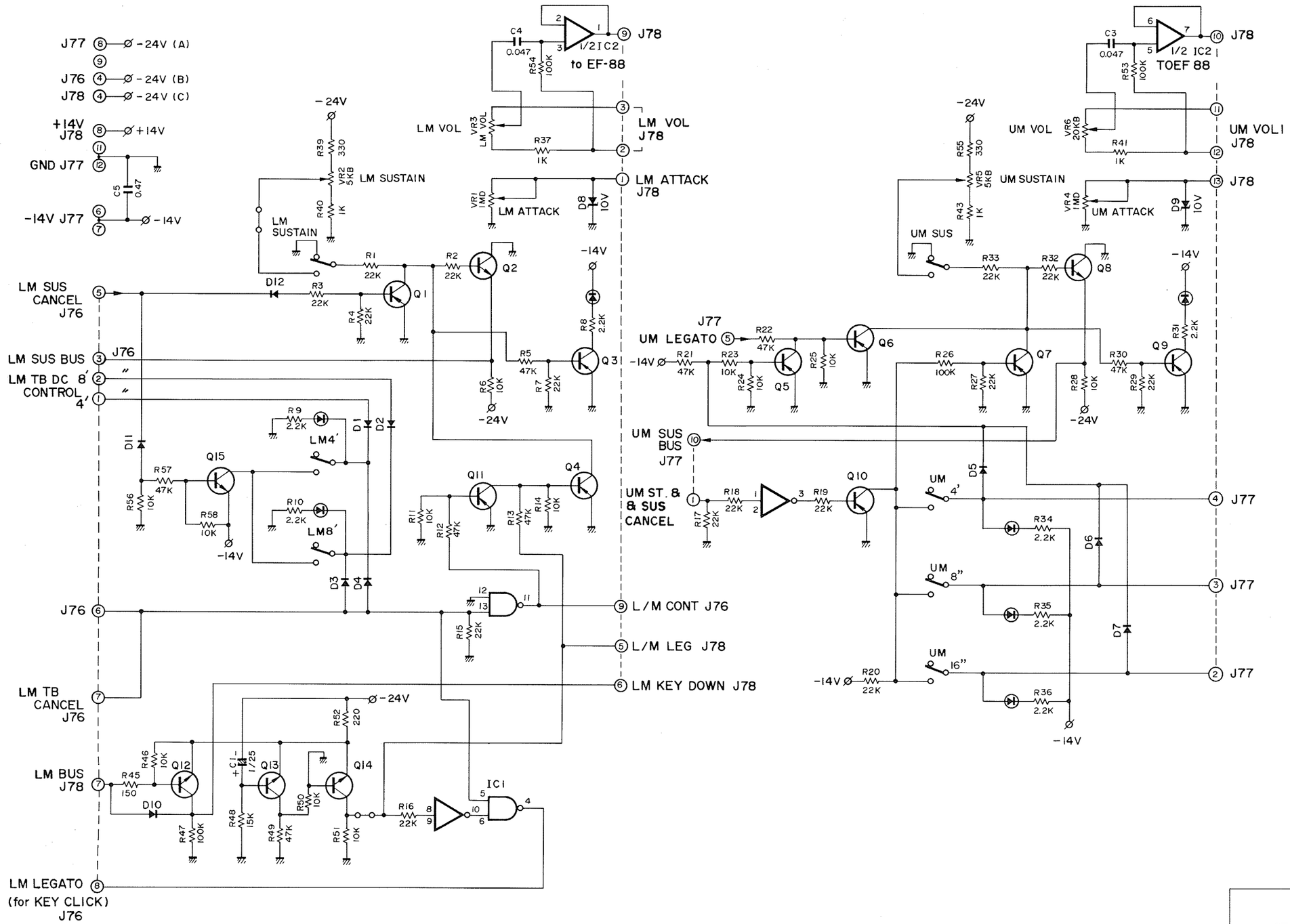

FIGURE 3-19
STRING CONTROL BOARD
225-23201 (SW-99)
SCHEMATIC

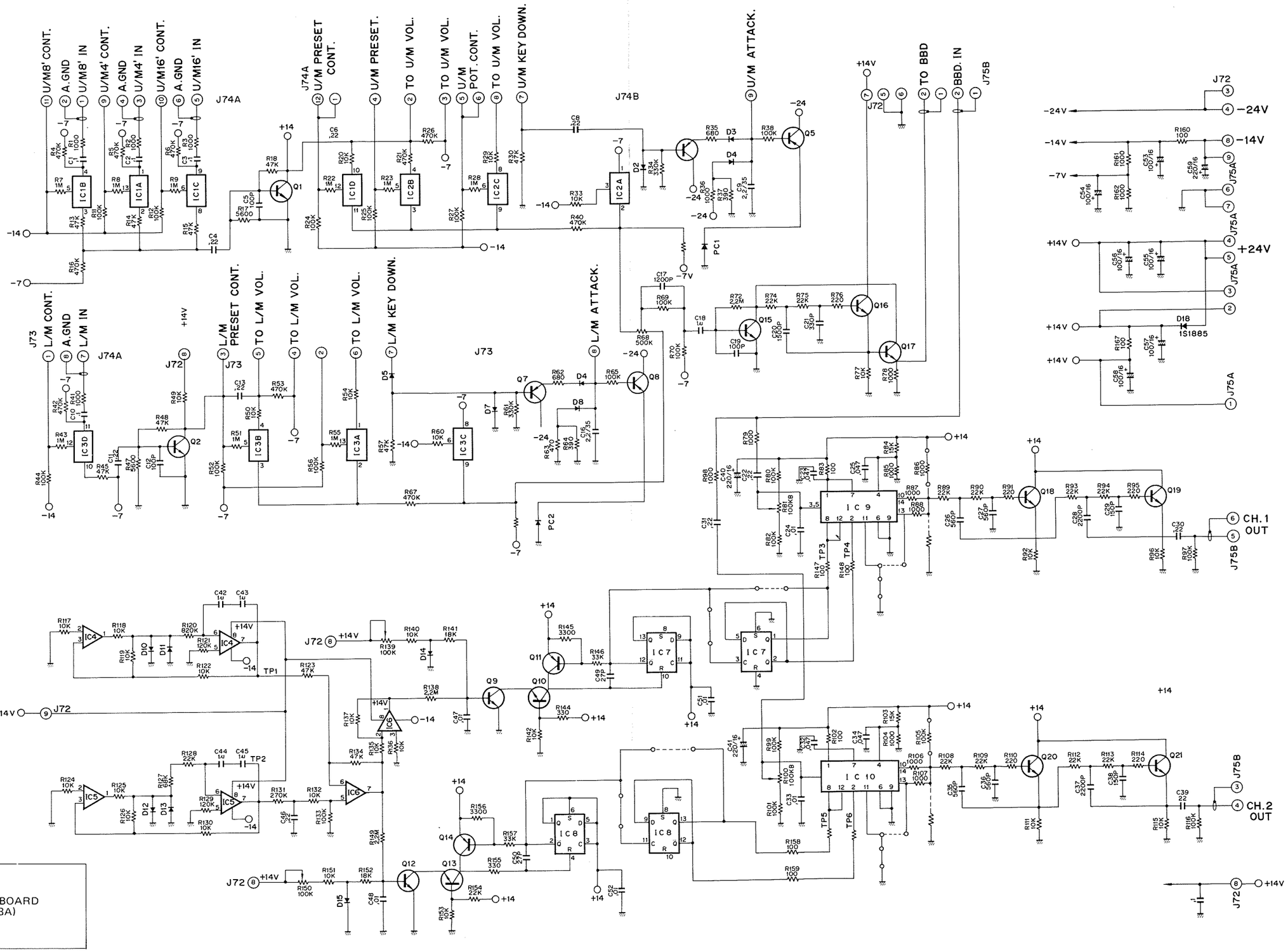

FIGURE 3-20
STRING ENSEMBLE BOARD
223-39212 (EF-88A)
SCHEMATIC

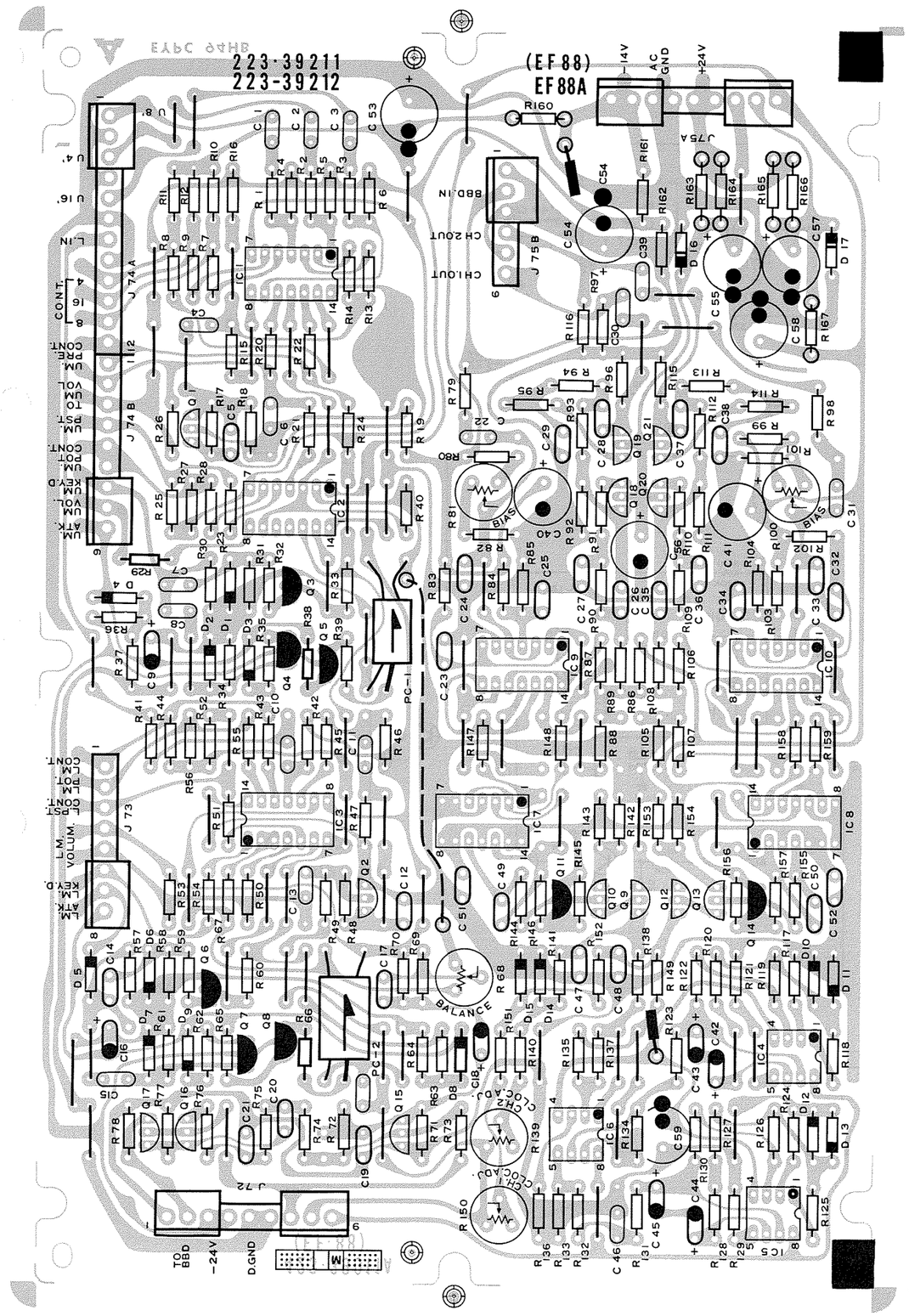

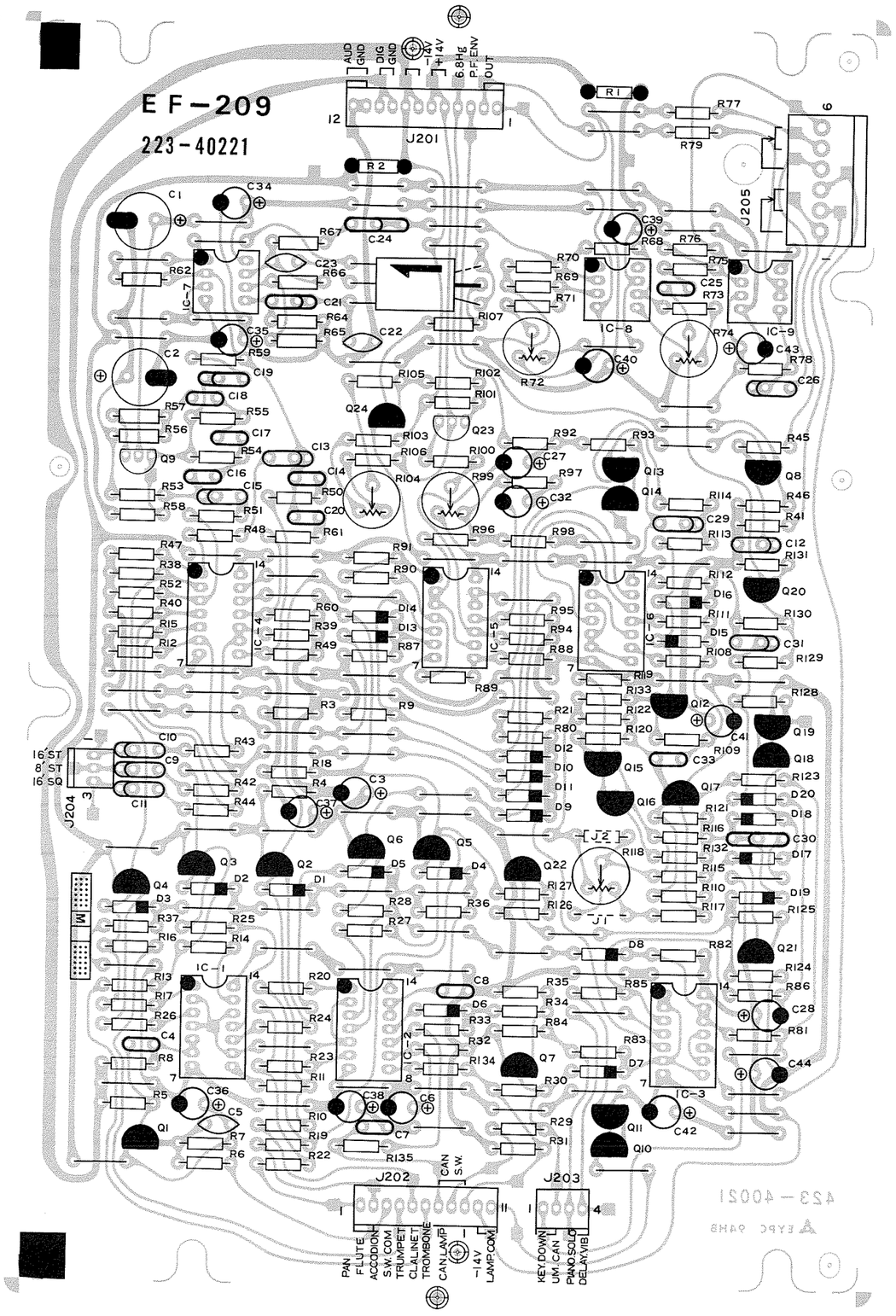

FIGURE 3-21
STRING ENSEMBLE BOARD
223-39212 (EF-88A)
PRESET BOARD
223-40221 (EF-209)
LAYOUT

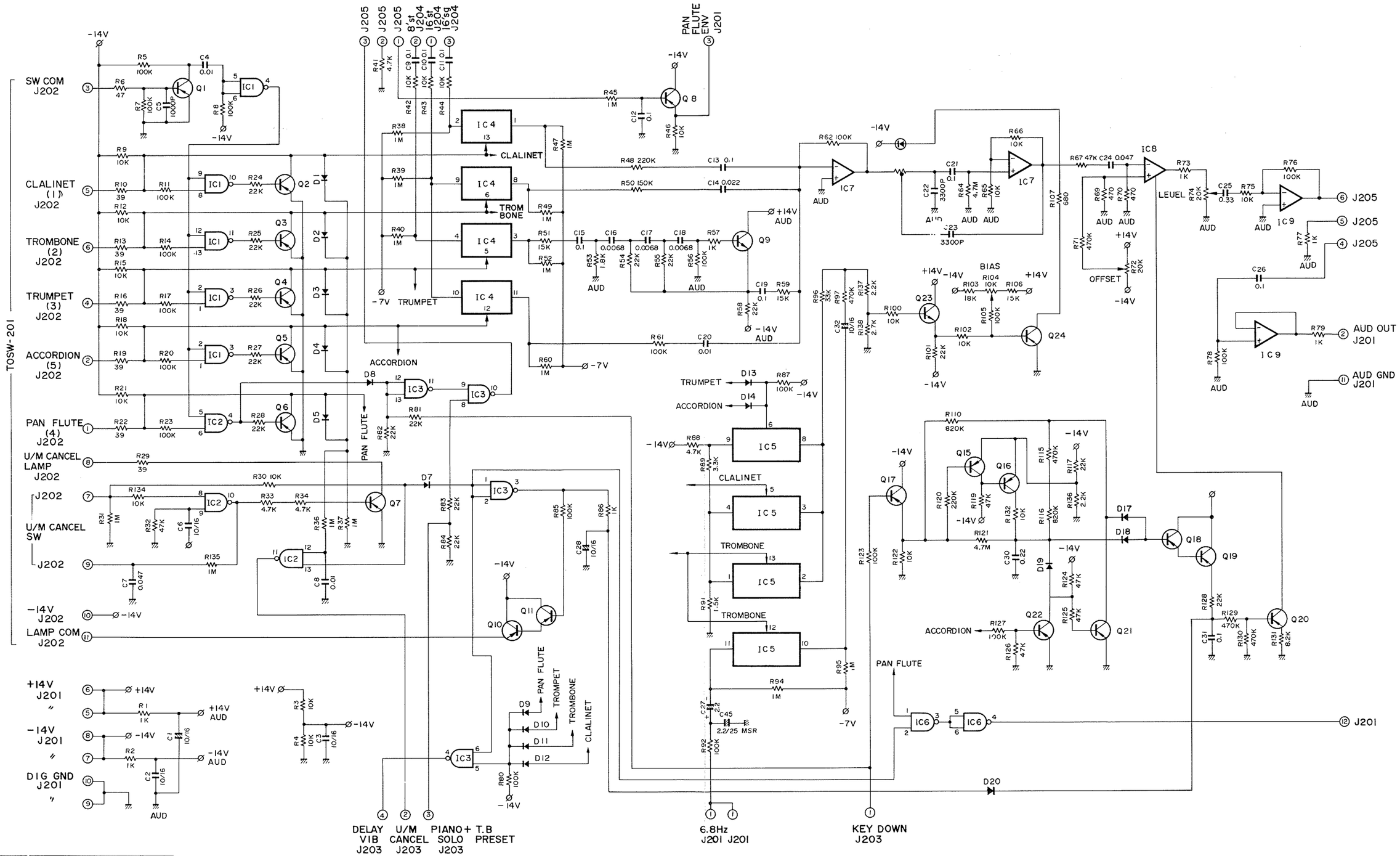

FIGURE 3-22
PRESET BOARD
223-40221 (EF-209)
SCHEMATIC

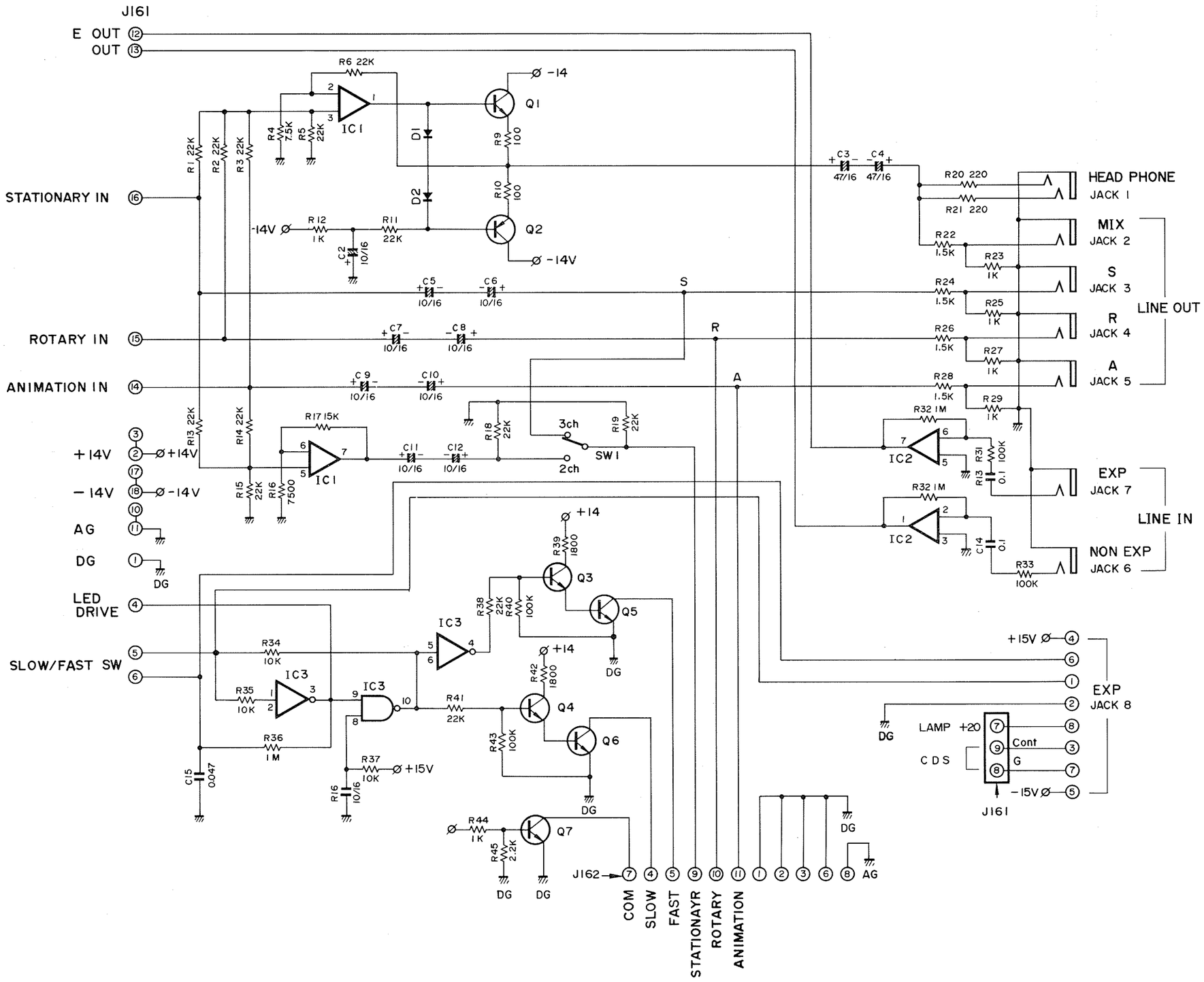

FIGURE 3-23
OUTPUT BOARD
219-52276 (PA-46)
SCHEMATIC

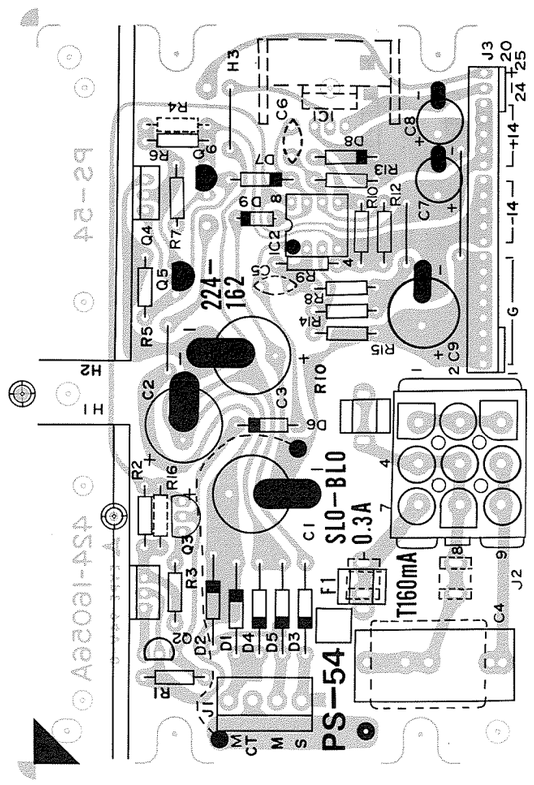

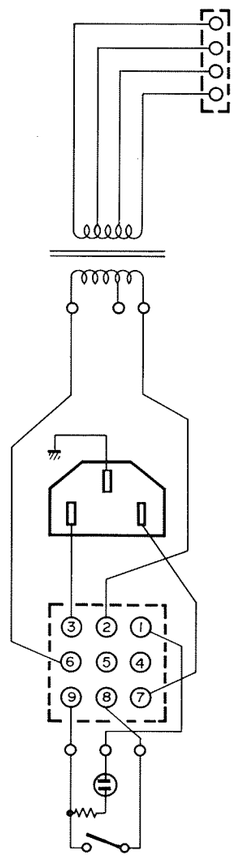

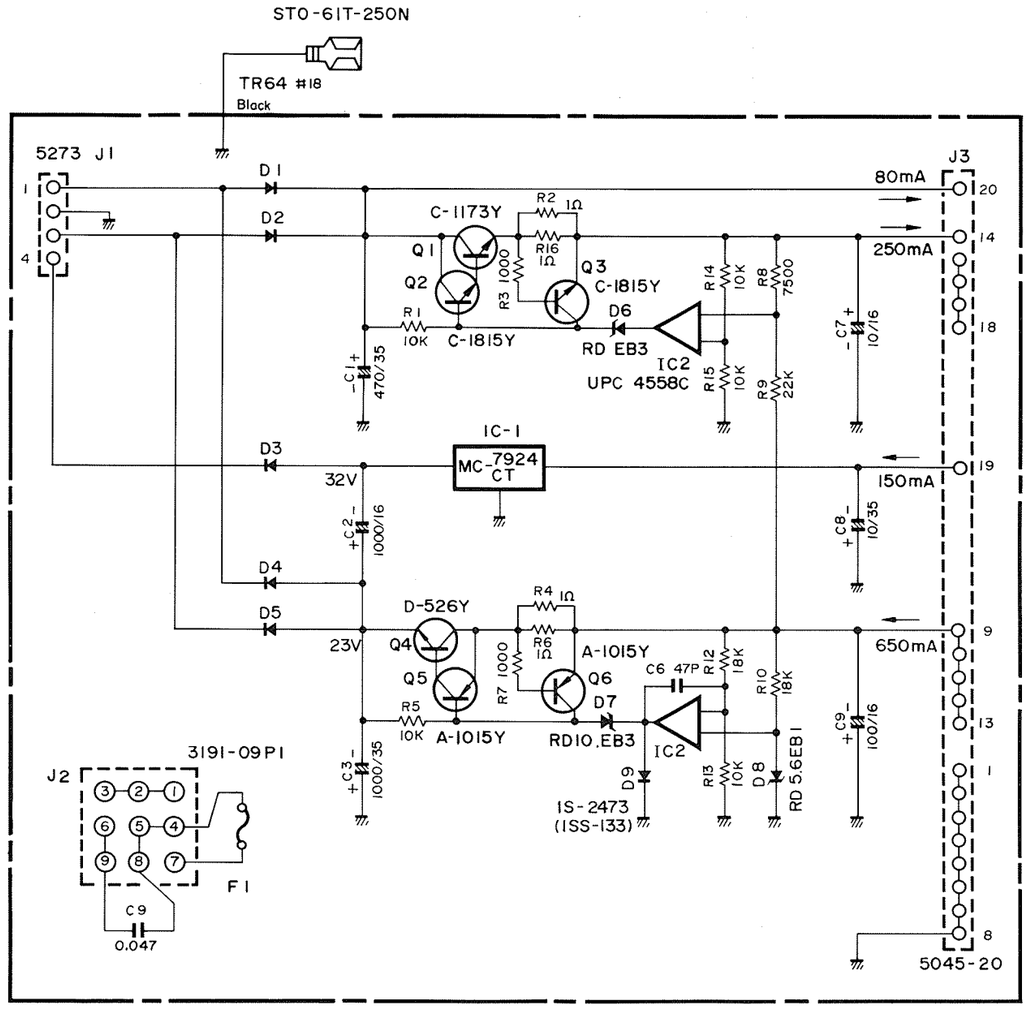

FIGURE 3-25
POWER SUPPLY BOARD
224-16258 (220 ~ 240V)
224-16261 (120V)
224-16264 (100V)
(PS-54C)
SCHEMATIC & LAYOUT

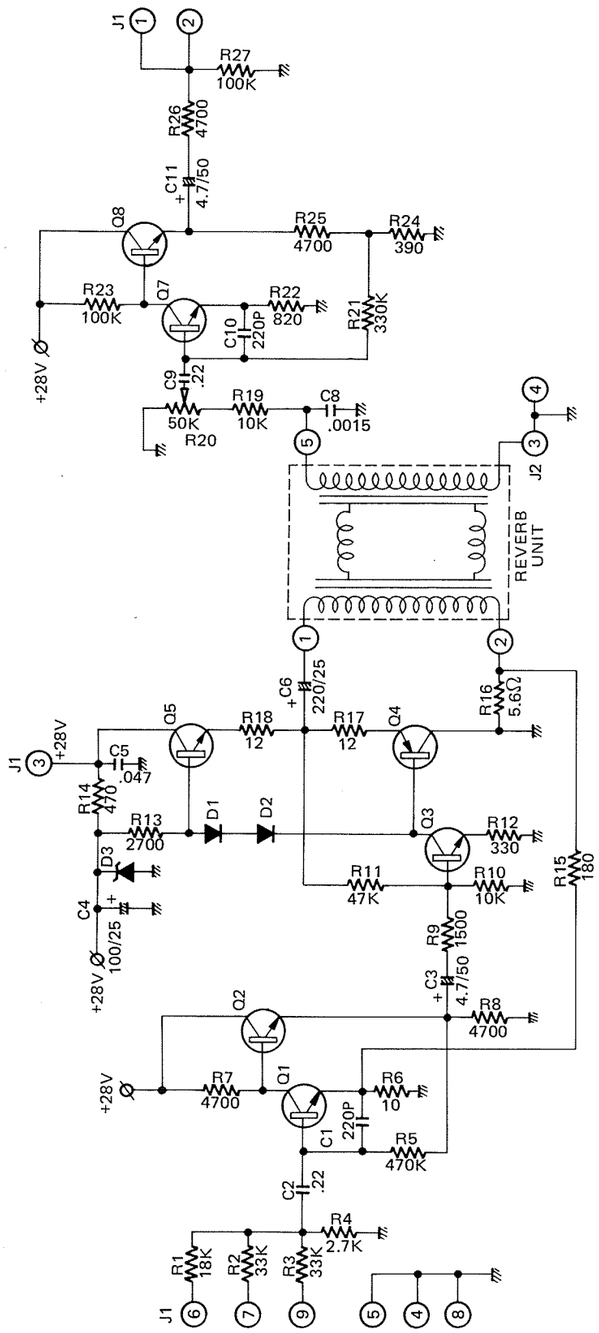

DESIGNATION	PART NO.	DESCRIPTION
Q1, 2, 7, 8	305-03077	2SC1681GR or 2SC1000GR
Q3	305-03040	2SC945Q
Q5	305-03049	2SC1406Q
Q4	305-01017	2SA751Q
D3	337-07007	WZ-210
D1, 2	306-01005	1S1555 or 1S2473

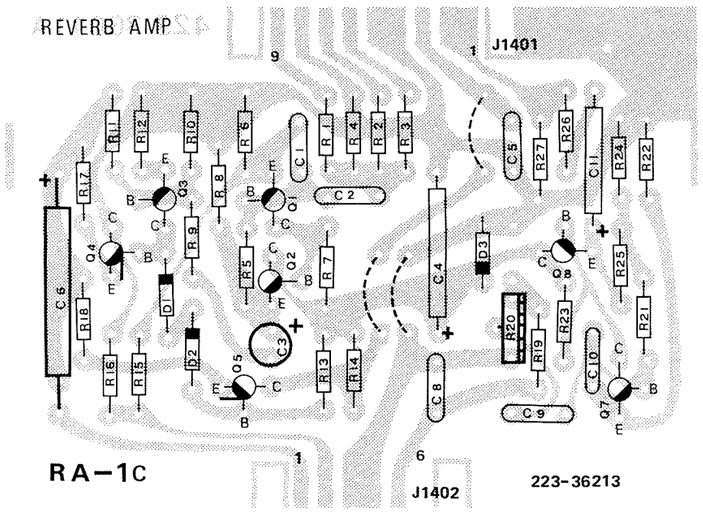

FIGURE 3-26
REVERB AMP. BOARD
223-36213A (RA-1C)
SCHEMATIC & LAYOUT

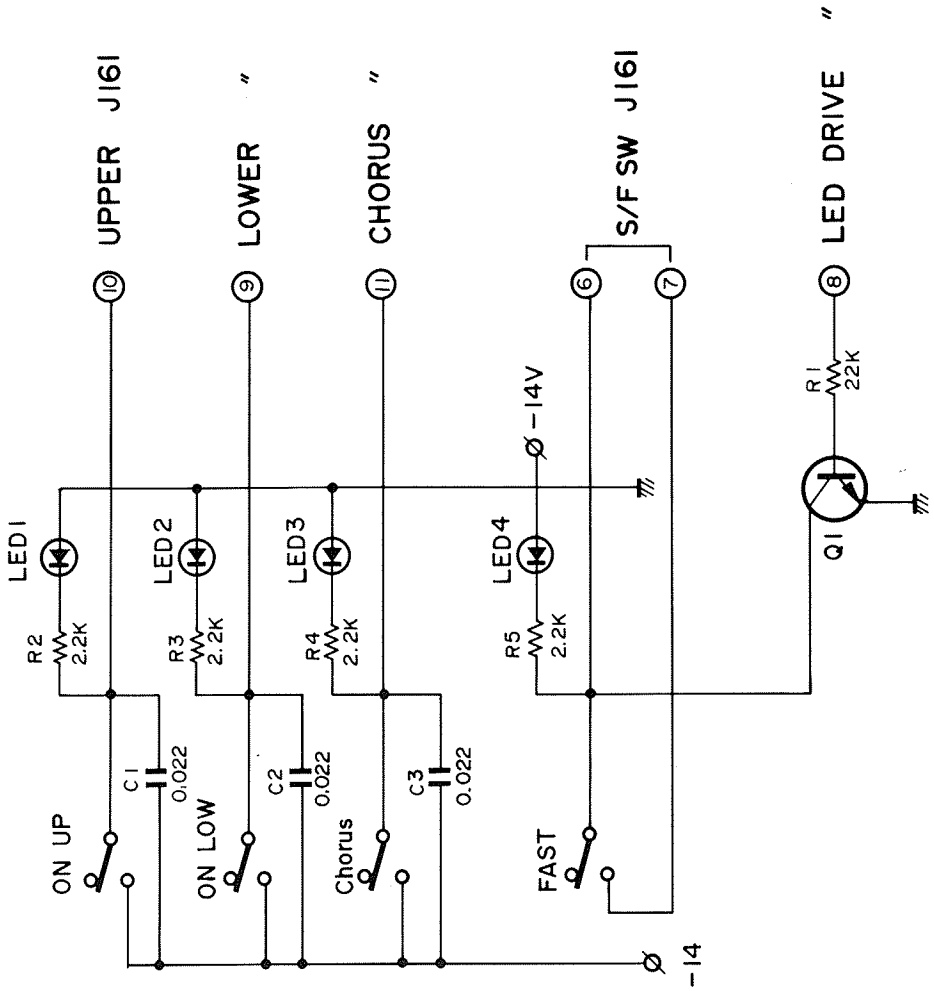

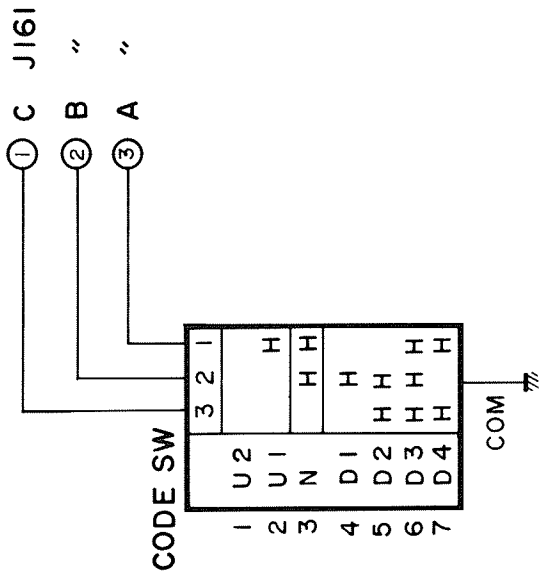

FIGURE 3-27
LESLIE SWITCH BOARD
225-23206 (SW-100)
SCHEMATIC

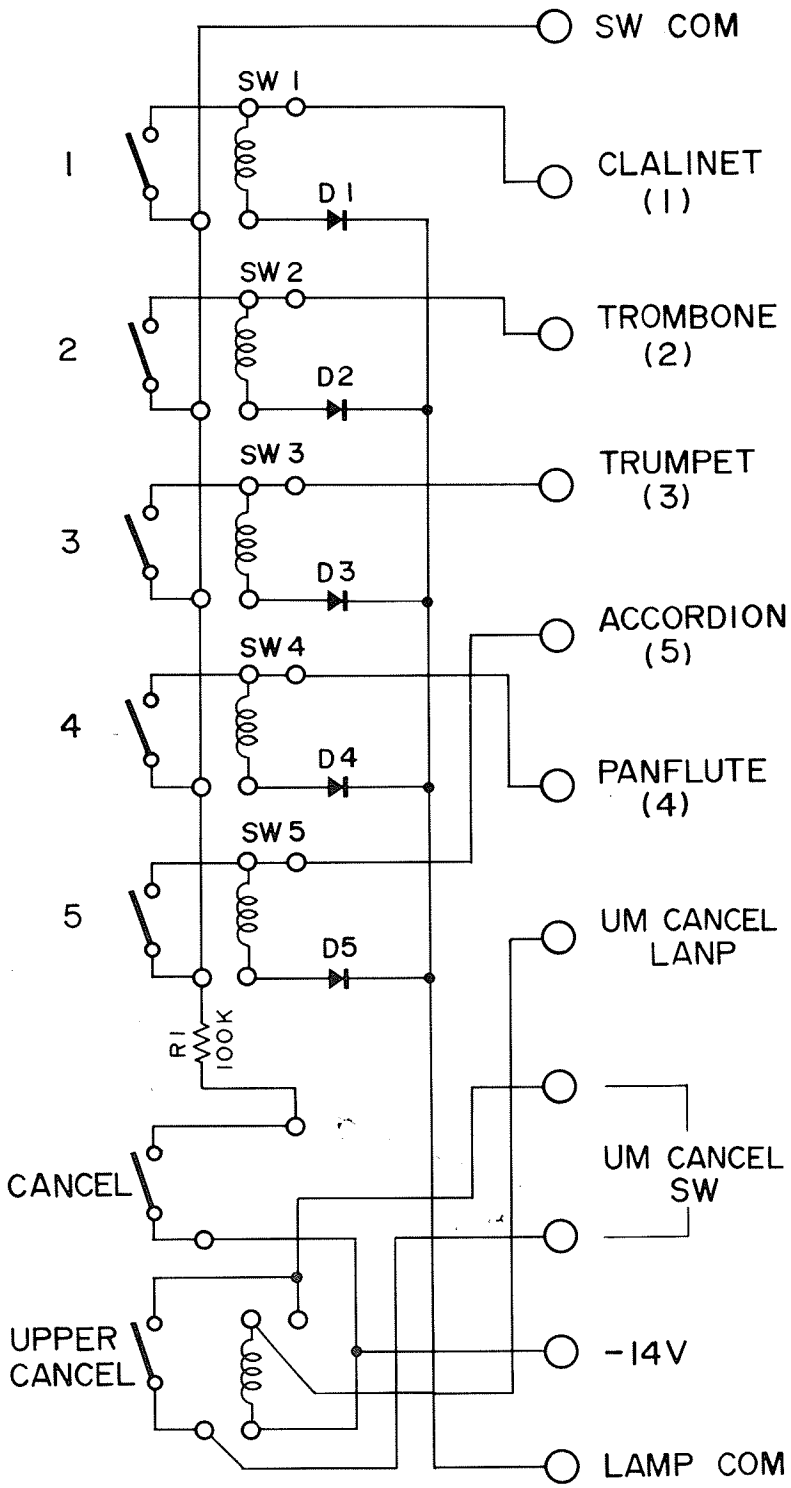

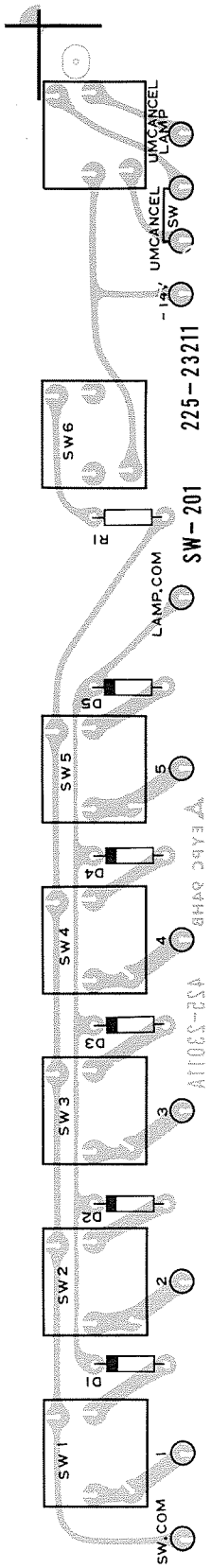

FIGURE 3-28
FRONT STRIP SWITCH BOARD
225-23211 (SW-201)
SCHEMATIC & LAYOUT

SECTION IV
PARTS LIST

(INDEX)

PAGE

ILLUSTRATED PARTS LIST

COMBO ORGAN B-300 (18550K) OBLIQUE FRONT VIEW 4-2
COMBO ORGAN B-300 (18550K) FRONT UPPER VIEW 4-3
COMBO ORGAN B-300 (18550K) JACK PANNEL ASS'Y DETAIL 4-4
COMBO ORGAN B-300 (18550K) STAND ASS'Y DETAIL 4-4
COMBO ORGAN B-300 (18550K) PEDAL KEY ASS'Y DETAIL 4-5
EXPRESSION PEDAL ASS'Y EXPOSED VIEW 4-5

PARTS LIST (PRINTED WIRING BOARD)

(SW-97)	PRESET SWITCH BOARD	225-22291	4-6
(SW-98)	PERCUSSION SWITCH BOARD	225-22296	4-6
(SW-90)	BASS SWITCH BOARD	225-22256	4-7
(SW-99)	STRINGS CONTROL BOARD	225-23201	4-8
(SW-100)	LESLIE SWITCH BOARD	225-23206	4-8
(PA-46)	OUTPUT BOARD	219-52276	4-8
(FL-35)	SYNTHESIS FILTER & KEY CLICK BOARD	222-16271	4-9
(EF-209)	PRESET BOARD	223-40221	4-10
(DV-10C)	TONE GENERATOR BOARD	229-20281	4-11
(LG-25)	PICTORIAL LOGIC BOARD	220-15251	4-11
(TG-35)	MULTIPLEX & BUS AMP. BOARD	232-12211	4-12
(MG-21)	MASTER OSCILLATOR BOARD	228-19266	4-12
(TG-25B)	DEMULTIPLEXER BOARD	232-11253	4-13
(SW-201)	FRONT STRIP SWITCH BOARD	225-23211	4-13
(EF-207C)	BASS BOARD	223-40211	4-13
(EF-88A)	STRING ENSEMBLE BOARD	223-39212	4-14
(PS-54C)	POWER SUPPLY BOARD	224-16258, 224-16261, 224-16264	4-14
(RA-1C)	REVERB AMPLIFIER BOARD	223-36213	4-15

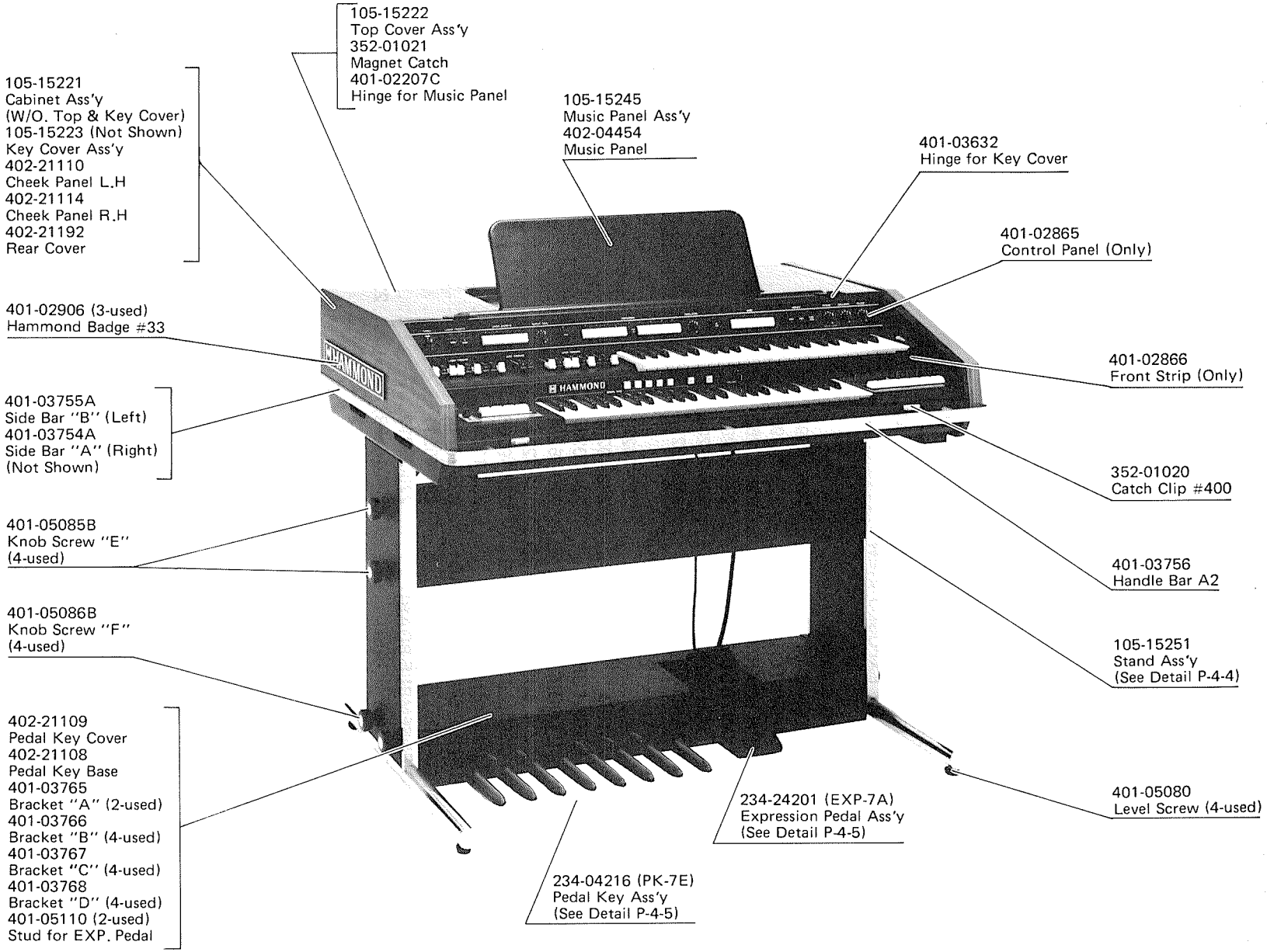

B-300 (18550K) OBLIQUE FRONT VIEW

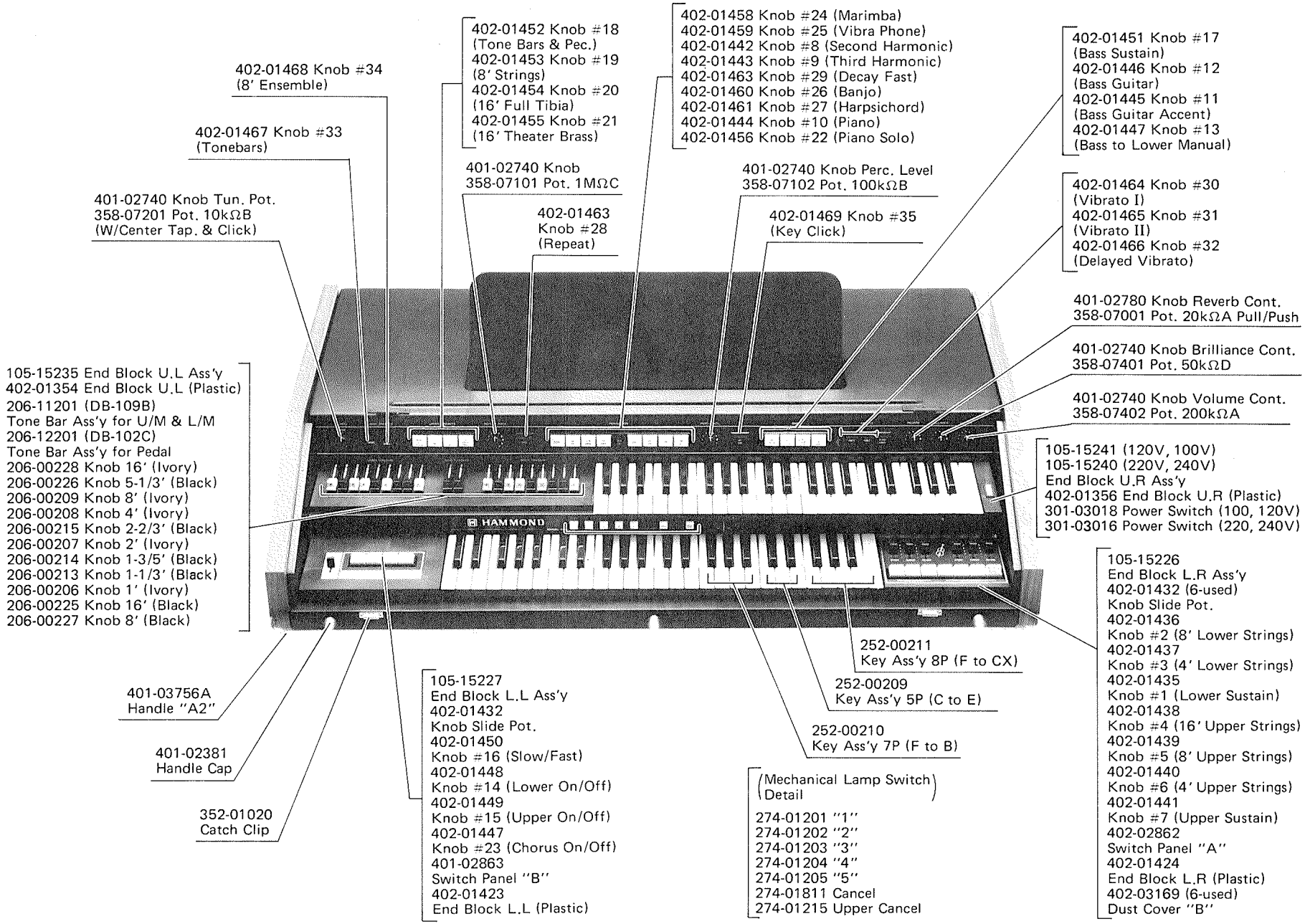

B-300 (18550K) FRONT UPPER VIEW

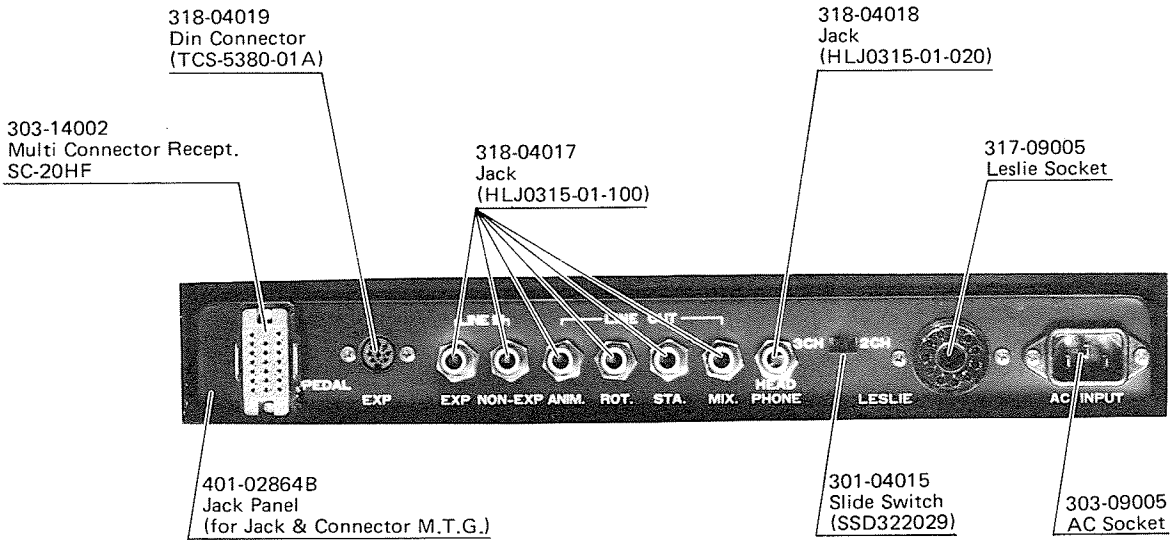

JACK PANNEL ASS'Y DETAIL

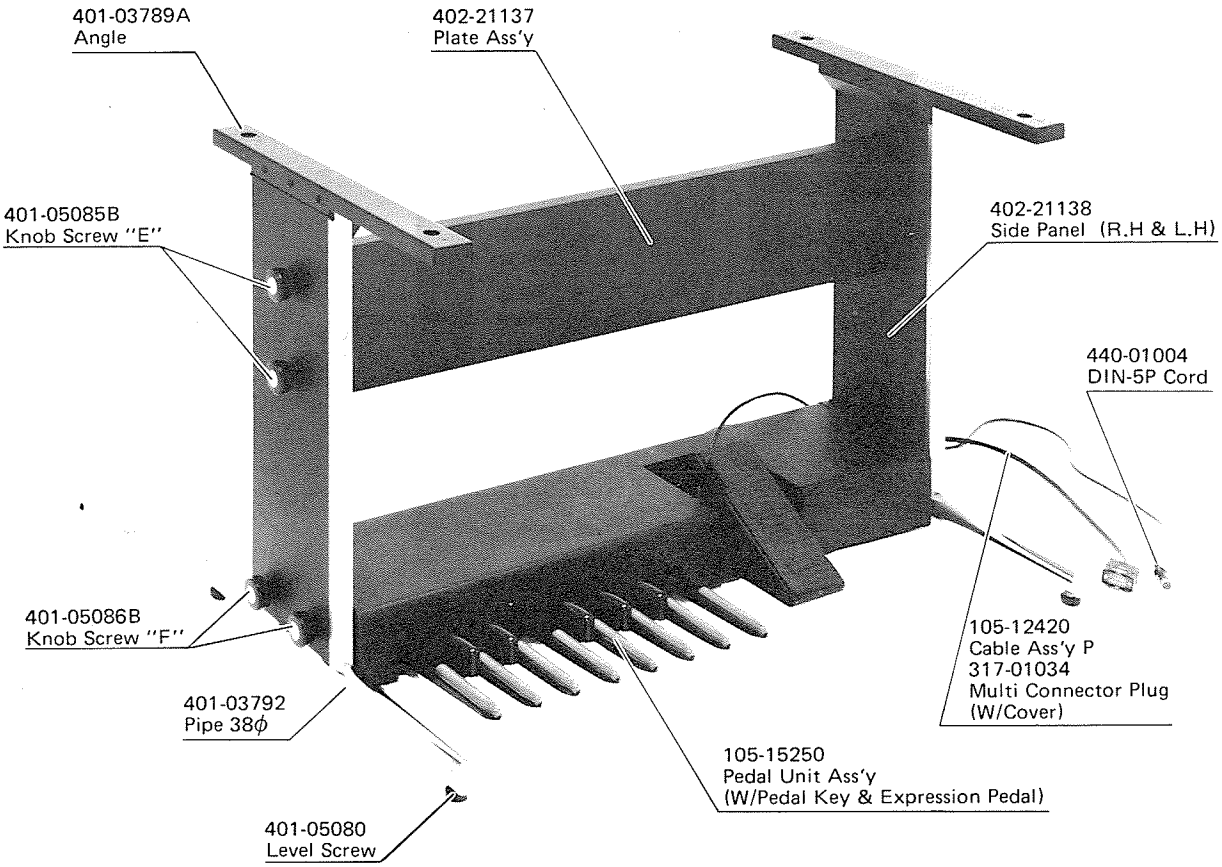

STAND ASS'Y DETAIL

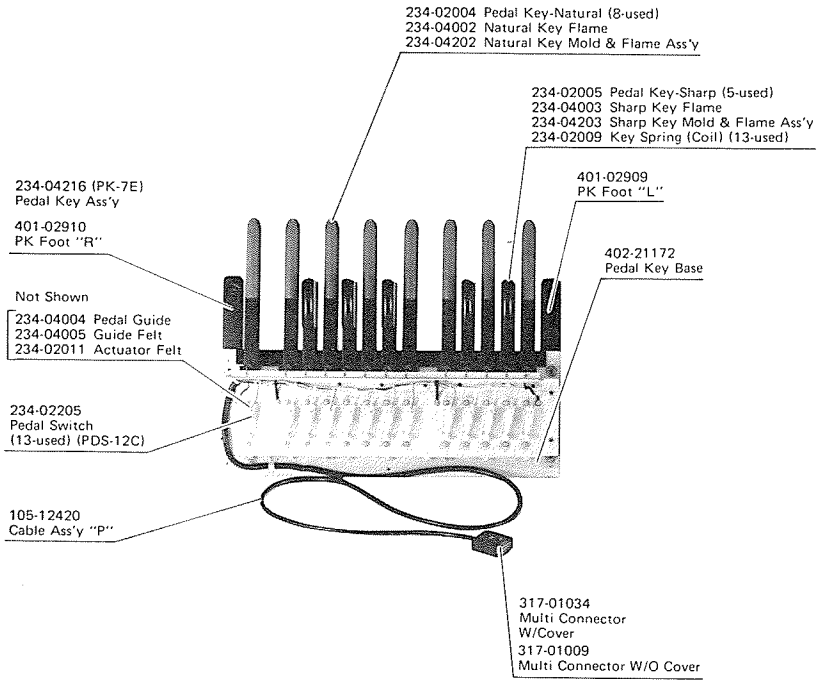

234-04216 (PK-7E) PEDAL KEY ASS'Y DETAIL

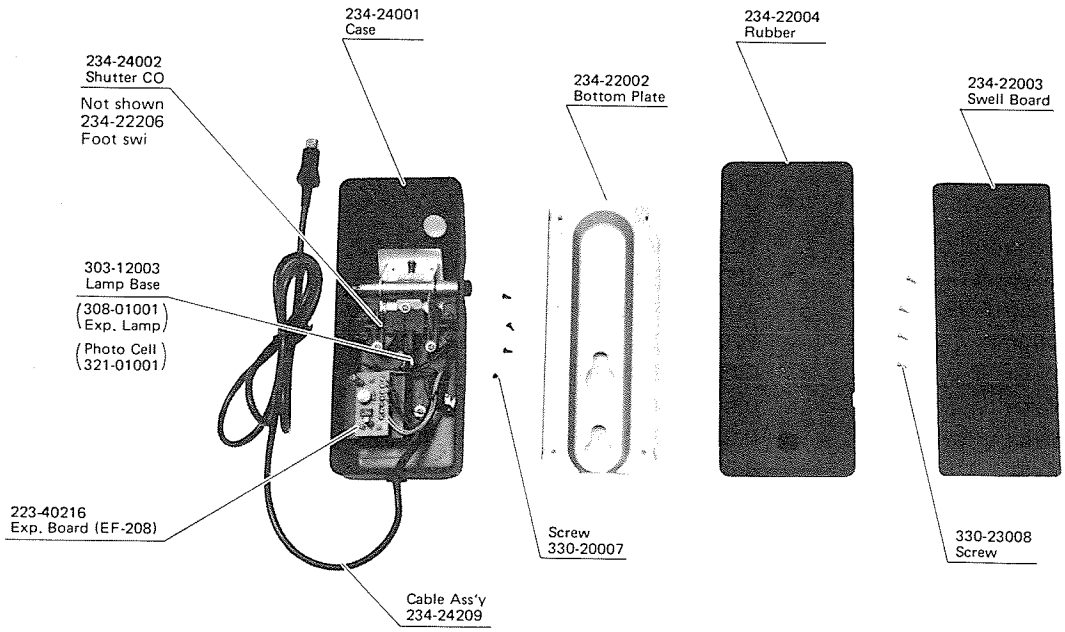

234-24201 (EXP-7A)
EXPRESSION PEDAL,ASS'Y
EXPOSED VIEW

SW-97 PRESET SWITCH BOARD 225-22291

PARTS NAME	DESCRIPTION	RC. NUMBER	PARTS NUMBER
Printed Wiring Board (Only)	No Parts		425-22091
Integrated Circuit	MC14001 BCP	IC1, 2	319-06012
Integrated Circuit	RC4558P or μPC4558C	IC3	319-23020
Transistor	2SA1015Y	Q10 ~ 27	305-01051
Transistor	2SC1815Y	Q1 ~ 8	305-03087
L.E.D.	SLD-30UR-L (RED)	LED1 ~ 6	321-03014
Push Switch	SUF21K31		301-02132
Push Switch	SUF41K19		301-02133
Potentiometer	K16110A45E 10KB with CLICK, CENTER TAP		358-07201
Resistor Aray (Printed Network)	100K-10 Elements	RA1, 2	320-97024
Capacitor Electrolytic	10μF/16V	C1, 6, 7, 8	311-08034

SW-98 PERCUSSION SWITCH BOARD 225-22296

PARTS NAME	DESCRIPTION	RC. NUMBER	PARTS NUMBER
Printed Wiring Board (Only)	No Parts		425-22096
Integrated Circuit	μPC4558C	IC1, 4, 8	319-23020
Integrated Circuit	MC14013BCP	IC2	319-03010
Integrated Circuit	MC14066BCP	IC5, 6, 9	319-06008
Integrated Circuit	MC14069UBCP	IC3	319-11001
Transistor	2SA1015Y	Q1, 2, 4 ~ 9	305-01051
Transistor	2SC1815Y	Q3	305-03087
Transistor	2SC2240GR	Q10 ~ 13	305-03093
Diode	1S2473	D1 ~ 45	306-01017
Trimmer Pot.	EVL-R0A-A00 500KB	R112, 113	336-01012
Potentiometer	K16110 DETE 100KB	VR2	358-07102
Potentiometer	K16110 DETE 1MC	VR1	358-07101
L.E.D.	SLD-30UR-L (RED)	LED1 ~ 11	321-03014
Push Switch	SUF12KH2		301-02137
Push Switch	SUF91KO2		301-02134
Capacitor Electrolytic	10μF/16V	C11, 12, 34, 39	311-08034
Capacitor Electrolytic	100μF/16V	C32, 33	311-08038
Capacitor Electrolytic	4.7μF/35V MS-R±10%	C19	311-25011
Capacitor Ceramic	220pF/50V	C15, 18, 23, 28	311-01046
Capacitor Mylar	0.001μF/50V 10%	C20, 21, 22	311-03001
Capacitor Mylar	0.01μF/50V 10%	C1, 2, 5, 6, 24, 36, 37	311-03015
Capacitor Mylar	0.022μF/50V 10%	C9, 29	311-03020
Capacitor Mylar	0.033μF/50V 10%	C25	311-03022
Capacitor Mylar	0.039μF/50V 10%	C16	311-03023
Capacitor Mylar	0.0039μF/50V 10%	C30	311-03010
Capacitor Mylar	0.1μF/50V 10%	C4, 7, 8	311-03029
Capacitor Mylar	0.22μF/50V 10%	C31	311-03031
Capacitor Mylar	0.47μF/50V 10%	C3	311-03037
Capacitor Mylar	0.047μF/50V 10%	C38	311-03024
Capacitor TF	0.0047μF±5%	C26, 27	311-28017
Capacitor TF	0.0015μF±5%	C35	311-28005
Capacitor TF	0.033μF±5%	C13, 14	311-26007
Capacitor TF	0.027μF±5%	C17	311-26006

SW-90 BASS SWITCH BOARD 225-22256

PARTS NAME	DESCRIPTION	RC. NUMBER	PARTS NUMBER
Printed Wiring Board (Only)	No Parts		425-22056
Integrated Circuit	MC14001BCP	IC8	319-06012
Integrated Circuit	MC14007BCP	IC3	319-06011
Integrated Circuit	MC14011UBCP	IC7	319-06017
Integrated Circuit	MC14066BCP	IC9, 11	319-06008
Integrated Circuit	AN6554	IC1, 10	319-23017
Integrated Circuit	MN3004	IC2	319-26006
Integrated Circuit	LM13600N	IC4	319-23022
Integrated Circuit	μPC4558C	IC6	319-23020
Integrated Circuit	LM3080N	IC5	319-23021
Transistor	2SA995F	Q10	305-01060
Transistor	2SA1015Y	Q4 ~ 7, 13 ~ 18, 20	305-01051
Transistor	2SC1815Y	Q9, 11, 19	305-03087
Transistor	2SC2240GR	Q8	305-03093
L.E.D.	SLD-30UR-L (RED)	LED1 ~ 7	321-03014
Trimmer Pot.	EVL-R4S-A00 50KB	TRM2	336-01009
Trimmer Pot.	EVL-R4S-A00 100KB	TRM4, 3	336-01010
Trimmer Pot.	EVL-R4S-A00 5K	TRM1	336-01005
Push Switch	SUF-31K29		301-02135
Push Switch	SUF-41K21		301-02136
Potentiometer	K164A000CA 50KD		358-07401
Potentiometer	K164A000CA 200KA		358-07402
Potentiometer	20KA with Push/Pull SW		358-07001
Capacitor Electrolytic	1μF/25V	C7, 25, 26	311-08044
Capacitor Electrolytic	4.7μF/25V	C40	311-08047
Capacitor Electrolytic	10μF/16V	C6, 16, 19, 35, 36, 39	311-08034
Capacitor Electrolytic	100μF/16V	C1, 27	311-08038
Capacitor Electrolytic	220μF/16V	C62	311-08039
Capacitor Ceramic	100pF/ECK-50V	C28, 29	311-01010
Capacitor Ceramic	220pF/ECK-50V	C24	311-01046
Capacitor Ceramic	470pF/ECK-50V	C23, 30	311-01015
Capacitor Ceramic	560pF/ECK-50V	C21	311-01031
Capacitor Mylar	0.0068μF/50V 10%	C9, 11, 13	311-03013
Capacitor Mylar	0.068μF/50V 10%	C31	311-03027
Capacitor Mylar	0.056μF/50V 10%	C32, 34	311-03026
Capacitor Mylar	0.047μF/50V 10%	C44, 47, 49	311-03024
Capacitor Mylar	0.1μF/50V 10%	C42, 43, 45, 46, 48, 50, 54, 55, 56	311-03029
Capacitor Mylar	0.15μF/50V 10%	C33	311-03030
Capacitor Mylar	0.22μF/50V 10%	C8, 15, 17, 18, 22, 41	311-03031
Capacitor Mylar	0.01μF/50V 10%	C63	311-03015
Capacitor Mylar	0.022μF/50V 10%	C20	311-03020

SW-99 STRINGS CONTROL BOARD 225-23201

PARTS NAME	DESCRIPTION	RC. NUMBER	PARTS NUMBER
Printed Wiring Board (Only)	No Parts		425-23001
Integrated Circuit	MC14011BCP	IC1	319-06014
Integrated Circuit	μPC4558C	IC2	319-23020
Transistor	2SA1015Y	Q1, 3 ~ 7, 9, 10, 11	305-01051
Transistor	2SC1815Y	Q2, 8	305-03087
Diode	1S1555	D1, 2, 4 ~ 7, 10 ~ 12	306-01005
Zener Diode	RD-10EB	D8, 9	337-06022
L.E.D.	SLD-30UR-L (RED)	LED1 ~ 7	321-03014
Push Switch	SUF71K11		301-02131
Potentiometer	S3015 GA08 5KB	VR2, 5	358-05013
Potentiometer	S3015 GA08 20KB	VR3, 6	358-05015
Potentiometer	S3015 GA08 1MD	VR1, 4	358-05052
Capacitor Tantalum	1μF/25V	C1	311-15044
Capacitor Mylar	0.047μF/50V	C3, 4, 5	311-03024

SW-100 LESLIE SWITCH BOARD 225-23206

PARTS NAME	DESCRIPTION	RC. NUMBER	PARTS NUMBER
Printed Wiring Board (Only)	No Parts		425-23006
Transistor	2SC1815Y	Q1	305-03087
Leslie Switch	SUF-41K18	SW2	301-02130
7P-Code Switch	SGL1017001	SW1	301-09001
L.E.D.	SLD-30UR-L (RED)	LED1 ~ 4	321-03014

PA-46 OUTPUT BOARD 219-52276

PARTS NAME	DESCRIPTION	RC. NUMBER	PARTS NUMBER
Printed Wiring Board (Only)	No Parts		419-52076
Integrated Circuit	μPC4558C	IC	319-23020
Integrated Circuit	MC14011BCP	IC	319-06017
Transistor	2SA1815Y	Q3, 4	305-01051
Transistor	2SC2655Y	Q1	305-03105
Transistor	2SA1020Y	Q2	305-01085
Transistor	2SC1173Y	Q5, 6, 7	305-03081
Diode	1S2473	D1, 2	306-01017
Capacitor Electrolytic	10μF/10V	C5 ~ 12, 16, 2	311-08034
Capacitor Electrolytic	47μF/10V	C3, 4	311-08037
Capacitor Mylar	0.1μF/50V	C13, 14	311-03029
Capacitor Mylar	0.047μF/50V	C15	311-03024
Switch	SSD322029		301-04015
Jack	HLJ0315-01-020	JACK1	318-04018
Jack	HLJ0315-01-100	JACK2 ~ 7	318-04017
Din Connector	TCS-5380-01A	JACK8	318-04019

FL-35 SYNTHESIS FILTER & KEY CLICK BOARD 222-16271

PARTS NAME	DESCRIPTION	RC. NUMBER	PARTS NUMBER
Printed Wiring Board (Only)	No Parts		422-16071
Integrated Circuit	MC14007BCP	IC1 ~ 3	319-06011
Integrated Circuit	MC14001BCP	IC4	319-06005
Integrated Circuit	MM5837N	IC5	319-08001
Integrated Circuit	μPC4558C	IC6, 7, 8, 9	319-23020
Integrated Circuit	MC14069UBCP	IC10	319-11001
Transistor	2SC1222E	Q1 ~ 21	305-03101
Resistor Aray	D13002110		320-97040
Resistor Aray	D13001650		320-97050
Capacitor Electrolytic	1μF/50V	C222, 230	311-08050
Capacitor Electrolytic	47μF/50V	C220, 221, 224, 225, 226, 227, 309	311-08065
Capacitor Electrolytic	2.2μF/50V MSR	C301, 303, 305	311-25009
Trimmer Pot.	EVL-R4S-A00 50KB	R232	336-01009
Diode	1S2473	D3 ~ 10	306-01017
Capacitor Ceramic	0.047μF	C213	311-26009
Capacitor TF	0.22μF/50V±5%	C4, 8, 10	311-26017
Capacitor TF	0.27μF/50V±5%	C30	311-26018
Capacitor TF	0.33μF/50V±5%	C11, 86	311-26019
Capacitor TF	0.47μF/50V±5%	C1, 75	311-26021
Capacitor Polyprophyrene	27pF/50V±5%	C69, 148	311-23032
Capacitor Polyprophyrene	47pF	C216, 217	311-23029
Capacitor Polyprophyrene	56pF/50V±5%	C59, 138	311-23028
Capacitor Polyprophyrene	100pF/50V±5%	C9, 19, 29, 39, 49, 60, 70, 83, 94, 105, 116, 127, 139, 150, 160, 168, 176, 184, 192, 200, 208, 210, 211, 212	311-23025
Capacitor Polyprophyrene	330pF/50V±5%	C199	311-23019
Capacitor Polyprophyrene	150pF/50V±5%	C48, 126, 207	311-23023
Capacitor Polyprophyrene	220pF/50V±5%	C38, 115, 213, 214	311-23021
Capacitor Polyprophyrene	470pF/50V±5%	C28, 104, 191	311-23017
Capacitor Polyprophyrene	560pF/50V±5%	C18, 93	311-23016
Capacitor Polyprophyrene	680pF/50V±5%	C183, 219	311-23015
Capacitor Polyprophyrene	1000pF/50V±5%	C8, 64 ~ 68, 82, 144 ~ 148, 306	311-23013
Capacitor Polyprophyrene	1200pF/50V±5%	C308	311-23009
Capacitor Polyprophyrene	1500pF/50V±5%	C175, 205, 206	311-23011
Capacitor Polyprophyrene	2200pF/50V±5%	C71, 151, 167, 209	311-23008
Capacitor Polyprophyrene	2700pF/50V±5%	C54 ~ 58, 133 ~ 137	311-21011
Capacitor Polyprophyrene	3300pF/50V±5%	C130, 194, 197, 198	311-23007
Capacitor Polyprophyrene	3900pF/50V±5%	C43 ~ 47, 63, 72, 121 ~ 125, 143, 152, 158	311-21015
Capacitor Polyprophyrene	4700pF/50V±5%	C42, 141, 142, 189, 201, 202, 62	311-23010
Capacitor Polyprophyrene	6800pF/50V±5%	C33 ~ 37, 110 ~ 114, 181, 182, 186, 203	311-23005
Capacitor Polyprophyrene	8200pF/50V±5%	C52, 61, 131, 140, 204	311-21023
Capacitor Polyprophyrene	0.01μF/50V±5%	C42, 107, 120, 178, 193, 223, 302, 304	311-21025
Capacitor Polyprophyrene	0.012μF/50V±5%	C23 ~ 27, 99 ~ 103, 195	311-21027

FL-35 CONTINUE

PARTS NAME	DESCRIPTION	RC. NUMBER	PARTS NUMBER
Capacitor TF	0.015μF/50V±5%	C32, 40, 51, 109, 117, 129, 154, 173, 174, 185, 187, 196	311-21029
Capacitor TF	0.018μF	C41, 119	311-21031
Capacitor TF	0.022μF	C13 ~ 17, 85, 88 ~ 92, 96, 162, 165, 166, 170, 177	311-21033
Capacitor TF	0.027μF	C106, 179, 307	311-21035
Capacitor TF	0.033μF	C3 ~ 7, 20, 22, 50, 77, 78 ~ 81, 95, 98, 128, 188	311-21037
Capacitor TF	0.039μF	C156, 157, 190	311-21039
Capacitor TF	0.047μF	C2, 12, 31, 74, 76, 87, 108, 153, 169, 171, 218	311-21041
Capacitor TF	0.068μF	C118, 163	311-21045
Capacitor TF	0.082μF	C21, 97, 172	311-21047
Capacitor TF	0.1μF	C161, 221	311-21049
Capacitor TF	0.15μF	C164	311-21053
Capacitor TF	0.18μF	C155	311-21054

EF-209 PRESET BOARD 223-40221

PARTS NAME	DESCRIPTION	RC. NUMBER	PARTS NUMBER
Printed Wiring Board (Only)	No Parts		423-40021
Integrated Circuit	MC14066BCP	IC4, 5	319-06008
Integrated Circuit	MC14011BCP	IC1, 2, 3, 6	319-06014
Integrated Circuit	μPC4558C	IC7, 9	319-23020
Integrated Circuit	LM3080N	IC8	319-23021
Transistor	2SA1015Y	Q1 ~ 8, 10 ~ 22, 24	305-01051
Transistor	2SC1815Y	Q23	305-03087
Transistor	2SC2240GR	Q9	305-03093
Photo Coupler	P873-10		321-02005
Diode	1S2473	D1 ~ 20	306-01017
Capacitor Electrolytic	10μF/16V	C1 ~ 3, 6, 28, 32, 34 ~ 44	311-08034
Capacitor Electrolytic	2.2μF/16V	C27	311-08031
Capacitor Electrolytic	2.2μF/25V MSR	C45	311-25009
Capacitor TF	1000pF/50V K	C5	311-01017
Capacitor TF	3300pF/50V J	C22, 23	311-23007
Capacitor TF	0.0068μF/50V J	C16 ~ 18	311-03013
Capacitor TF	0.01μF/50V K	C4, 8, 20	311-03015
Capacitor TF	0.022μF/50V K	C14	311-03020
Capacitor TF	0.047μF/50V K	C7, 24	311-03024
Capacitor TF	0.1μF/50V K	C9 ~ 13, 15, 19, 21, 26, 31	311-03029
Capacitor TF	0.22μF/50V K	C30	311-03031
Capacitor TF	0.33μF/50V K	C25	311-03032

FL-35 SYNTHESIS FILTER & KEY CLICK BOARD 222-16271

PARTS NAME	DESCRIPTION	RC. NUMBER	PARTS NUMBER
Printed Wiring Board (Only)	No Parts		422-16071
Integrated Circuit	MC14007BCP	IC1 ~ 3	319-06011
Integrated Circuit	MC14001BCP	IC4	319-06005
Integrated Circuit	MM5837N	IC5	319-08001
Integrated Circuit	μPC4558C	IC6, 7, 8, 9	319-23020
Integrated Circuit	MC14069UBCP	IC10	319-11001
Transistor	2SC1222E	Q1 ~ 21	305-03101
Resistor Aray	D13002110		320-97040
Resistor Aray	D13001650		320-97050
Capacitor Electrolytic	1μF/50V	C222, 230	311-08050
Capacitor Electrolytic	47μF/50V	C220, 221, 224, 225, 226, 227, 309	311-08065
Capacitor Electrolytic	2.2μF/50V MSR	C301, 303, 305	311-25009
Trimmer Pot.	EVL-R4S-A00 50KB	R232	336-01009
Diode	1S2473	D3 ~ 10	306-01017
Capacitor Ceramic	0.047μF	C213	311-26009
Capacitor TF	0.22μF/50V±5%	C4, 8, 10	311-26017
Capacitor TF	0.27μF/50V±5%	C30	311-26018
Capacitor TF	0.33μF/50V±5%	C11, 86	311-26019
Capacitor TF	0.47μF/50V±5%	C1, 75	311-26021
Capacitor Polyprophyrene	27pF/50V±5%	C69, 148	311-23032
Capacitor Polyprophyrene	47pF	C216, 217	311-23029
Capacitor Polyprophyrene	56pF/50V±5%	C59, 138	311-23028
Capacitor Polyprophyrene	100pF/50V±5%	C9, 19, 29, 39, 49, 60, 70, 83, 94, 105, 116, 127, 139, 150, 160, 168, 176, 184, 192, 200, 208, 210, 211, 212	311-23025
Capacitor Polyprophyrene	330pF/50V±5%	C199	311-23019
Capacitor Polyprophyrene	150pF/50V±5%	C48, 126, 207	311-23023
Capacitor Polyprophyrene	220pF/50V±5%	C38, 115, 213, 214	311-23021
Capacitor Polyprophyrene	470pF/50V±5%	C28, 104, 191	311-23017
Capacitor Polyprophyrene	560pF/50V±5%	C18, 93	311-23016
Capacitor Polyprophyrene	680pF/50V±5%	C183, 219	311-23015
Capacitor Polyprophyrene	1000pF/50V±5%	C8, 64 ~ 68, 82, 144 ~ 148, 306	311-23013
Capacitor Polyprophyrene	1200pF/50V±5%	C308	311-23009
Capacitor Polyprophyrene	1500pF/50V±5%	C175, 205, 206	311-23011
Capacitor Polyprophyrene	2200pF/50V±5%	C71, 151, 167, 209	311-23008
Capacitor Polyprophyrene	2700pF/50V±5%	C54 ~ 58, 133 ~ 137	311-21011
Capacitor Polyprophyrene	3300pF/50V±5%	C130, 194, 197, 198	311-23007
Capacitor Polyprophyrene	3900pF/50V±5%	C43 ~ 47, 63, 72, 121 ~ 125, 143, 152, 158	311-21015
Capacitor Polyprophyrene	4700pF/50V±5%	C42, 141, 142, 189, 201, 202, 62	311-23010
Capacitor Polyprophyrene	6800pF/50V±5%	C33 ~ 37, 110 ~ 114, 181, 182, 186, 203	311-23005
Capacitor Polyprophyrene	8200pF/50V±5%	C52, 61, 131, 140, 204	311-21023
Capacitor Polyprophyrene	0.01μF/50V±5%	C42, 107, 120, 178, 193, 223, 302, 304	311-21025
Capacitor Polyprophyrene	0.012μF/50V±5%	C23 ~ 27, 99 ~ 103, 195	311-21027

FL-35 CONTINUE

PARTS NAME	DESCRIPTION	RC. NUMBER	PARTS NUMBER
Capacitor TF	0.015μF/50V±5%	C32, 40, 51, 109, 117, 129, 154, 173, 174, 185, 187, 196	311-21029
Capacitor TF	0.018μF	C41, 119	311-21031
Capacitor TF	0.022μF	C13 ~ 17, 85, 88 ~ 92, 96, 162, 165, 166, 170, 177	311-21033
Capacitor TF	0.027μF	C106, 179, 307	311-21035
Capacitor TF	0.033μF	C3 ~ 7, 20, 22, 50, 77, 78 ~ 81, 95, 98, 128, 188	311-21037
Capacitor TF	0.039μF	C156, 157, 190	311-21039
Capacitor TF	0.047μF	C2, 12, 31, 74, 76, 87, 108, 153, 169, 171, 218	311-21041
Capacitor TF	0.068μF	C118, 163	311-21045
Capacitor TF	0.082μF	C21, 97, 172	311-21047
Capacitor TF	0.1μF	C161, 221	311-21049
Capacitor TF	0.15μF	C164	311-21053
Capacitor TF	0.18μF	C155	311-21054

EF-209 PRESET BOARD 223-40221

PARTS NAME	DESCRIPTION	RC. NUMBER	PARTS NUMBER
Printed Wiring Board (Only)	No Parts		423-40021
Integrated Circuit	MC14066BCP	IC4, 5	319-06008
Integrated Circuit	MC14011BCP	IC1, 2, 3, 6	319-06014
Integrated Circuit	μPC4558C	IC7, 9	319-23020
Integrated Circuit	LM3080N	IC8	319-23021
Transistor	2SA1015Y	Q1 ~ 8, 10 ~ 22, 24	305-01051
Transistor	2SC1815Y	Q23	305-03087
Transistor	2SC2240GR	Q9	305-03093
Photo Coupler	P873-10		321-02005
Diode	1S2473	D1 ~ 20	306-01017
Capacitor Electrolytic	10μF/16V	C1 ~ 3, 6, 28, 32, 34 ~ 44	311-08034
Capacitor Electrolytic	2.2μF/16V	C27	311-08031
Capacitor Electrolytic	2.2μF/25V MSR	C45	311-25009
Capacitor TF	1000pF/50V K	C5	311-01017
Capacitor TF	3300pF/50V J	C22, 23	311-23007
Capacitor TF	0.0068μF/50V J	C16 ~ 18	311-03013
Capacitor TF	0.01μF/50V K	C4, 8, 20	311-03015
Capacitor TF	0.022μF/50V K	C14	311-03020
Capacitor TF	0.047μF/50V K	C7, 24	311-03024
Capacitor TF	0.1μF/50V K	C9 ~ 13, 15, 19, 21, 26, 31	311-03029
Capacitor TF	0.22μF/50V K	C30	311-03031
Capacitor TF	0.33μF/50V K	C25	311-03032

DV-10C TONE GENERATOR BOARD 229-20281

PARTS NAME	DESCRIPTION	RC. NUMBER	PARTS NUMBER
Printed Wiring Board (Only)	No Parts		429-20086
L.S.I.	075-000440		319-07007
Transistor	2SA936		305-01056
Transistor	2SA1015Y		305-01051
Transistor	2SC1815Y		305-03087
Diode	1S1555		306-01005
Diode	1SS84		306-01039
Resistor Aray	EXBG810743JW		320-97061
Resistor Aray	10KX8		320-97035
Resistor Aray	22KX12		320-97059
Resistor Aray	100KX8		320-97008
Capacitor Electrolytic	470μF/16V H		311-08177
Capacitor Electrolytic	47μF/16V		311-08037
Capacitor Electrolytic	22μF/35V		311-08077
Capacitor Ceramic	47pF/50V K		311-01027
Capacitor Ceramic	470pF/50V K		311-01015
Capacitor Ceramic	2200pF/50V K		311-01058
Capacitor Ceramic	100pF/50V K		311-01010
Capacitor TF	0.015μF/50V K		311-26003
Capacitor TF	0.022μF/50V K		311-26005
Capacitor TF	0.033μF/50V K		311-26007
Capacitor TF	0.047μF/50V K		311-26009
Capacitor TF	0.068μF/50V K		311-26011
Capacitor TF	0.1μF/50V K		311-26013
Capacitor TF	0.15μF/50V K		311-26015
Capacitor TF	0.22μF/50V K		311-26017

LG-25 PICTORIAL LOGIC BOARD 220-15251

PARTS NAME	DESCRIPTION	RC. NUMBER	PARTS NUMBER
Printed Wiring Board (Only)	No Parts		420-15051
Printed Wiring Board	No Parts		420-15051
Integrated Circuit	MC-14013BCP	IC1	319-03004
Integrated Circuit	MC-14022BCP	IC2	319-03008
Integrated Circuit	MC-14001BCP	IC3, 6	319-06005
Integrated Circuit	MC-14011BCP	IC4, 8	319-06014
Integrated Circuit	MC-14071BCP	IC5	319-06022
Integrated Circuit	MC-14023BCP	IC7	319-06009
Diode	1S1555 or IS2473	D1, 2	306-01005
Trimmer Pot	20KB EVT-R4SA00	R16	336-01007
Capacitor Tantalum	10μF/16V	C5	311-15030
Capacitor Ceramic	100pF/50V	C6, 7, 8	311-01010
Capacitor Ceramic	15pF/50V	C9	311-01006
Capacitor Polystyrene	.47μF/50V	C1 thru 4	311-04118
Connector	5145-6B		317-03145
Connector	5145-12B		317-03150

TG-35 MULTIPLEX & BUS AMP BOARD 232-12211

PARTS NAME	DESCRIPTION	RC. NUMBER	PARTS NUMBER
Printed Wiring Board (Only)	No Parts		432-12011
Integrated Circuit	MC14052 or CD4052BE	IC7 ~ 11	319-06013
Integrated Circuit	MC14066BCP	IC1, 2	319-06008
Integrated Circuit	MC14069UBCP	IC6	319-11001
Integrated Circuit	μPC4558C	IC3, 4, 5	319-23020
Transistor	2SA1015Y	Q1 ~ 9	305-01051
Transistor	2SC1815Y	Q10	305-03087
Diode	1S1555	D1 ~ 10	306-01005
Capacitor Electrolytic	1μF/50V	C15	311-08058
Capacitor Electrolytic	0.22μF/16V MSR	C17	311-25003
Capacitor Electrolytic	4.7μF/25V	C27	311-08047
Capacitor Electrolytic	10μF/16V	C23, 24	311-08034
Capacitor Ceramic	27pF/50V ECK	C14	311-01051
Capacitor Ceramic	470pF/50V ECK	C16	311-01015
Capacitor Ceramic	680pF/50V ECK	C7	311-01032
Capacitor Ceramic	4700pF/50V ECKDIH	C2 ~ 6	311-22001
Capacitor Mylar	0.01μF/50V 10%	C1, 13, 18, 26, 28, 30, 32, 34, 36, 37, 38, 40, 41, 42, 44, 45, 46, 48, 49, 50, 52, 53, 54, 56, 58, 60, 61, 62	311-03015
Capacitor Mylar	0.015μF/50V 10%	C10	311-03017
Capacitor Mylar	0.039μF/50V 10%	C11	311-03023
Capacitor Mylar	0.047μF/50V 10%	C12, 25, 64 ~ 67	311-03024
Capacitor Mylar	0.0027μF/50V 10%	C8	311-03007
Capacitor Mylar	0.0082μF/50V 10%	C9	311-03014

MG-21 MASTER OSCILLATOR BOARD 228-19266

PARTS NAME	DESCRIPTION	RC. NUMBER	PARTS NUMBER
Printed Wiring Board (Only)	No Parts		428-19066
Integrated Circuit	S50240	IC4	319-01014
Integrated Circuit	MC14051BCP	IC3	319-06033
Integrated Circuit	CD4046B	IC2	319-25007
Integrated Circuit	MC14040BCP	IC1	319-03012
Transistor	2SA1015Y	Q3	305-01051
Transistor	2SC1675M	Q1, 2	305-03082
Coil	2170	L1	312-02020
Diode	1S2473	D1 ~ 17	306-01017
Vari Cap.	MV104		306-05005
Capacitor Electrolytic	10μF/16V	C5, 6, 8	311-08034
Capacitor Electrolytic	100μF/16V	C10	311-08038
Capacitor Ceramic	220pF/50V K	C3	311-01046
Capacitor Ceramic	390pF/50V K	C4	311-01053
Capacitor Ceramic	47pF/50V	C7	311-01027
Capacitor Ceramic (Thermal Compensater)	220p N330	C2	311-19026
Capacitor TF	0.01μF/50V K	C1	311-26001
Capacitor TF	0.1μF/50V K	C9	311-26013

TG-25B DEMULTIPLEXER BOARD 232-11253

PARTS NAME	DESCRIPTION	RC. NUMBER	PARTS NUMBER
Printed Wiring Board (Only)	No Parts		432-11051A
Integrated Circuit	CD4052BE		319-06013
Transistor	2SA970GR		305-01048
Transistor	2SC2240GR		305-03093
Capacitor Tantalum	4.7μF/25V±10%		311-15048
Capacitor Electrolytic	47μF/16V		311-08037
Capacitor Electrolytic	220μF/16V		311-08039
Capacitor Electrolytic	470μF/16V		311-08041
Capacitor Electrolytic	1000μF/10V		311-08028
Capacitor TF	0.01μF/50V		311-04015
Capacitor Polystyrene	2700pF/50V		311-03007

SW-201 FRONT STRIP SWITCH BOARD 225-23211

PARTS NAME	DESCRIPTION	RC. NUMBER	PARTS NUMBER
Printed Wiring Board (Only)	No Parts		425-23011
Diode	1S2473	D1 ~ 5	306-01017

EF-207C BASS BOARD 223-40211

PARTS NAME	DESCRIPTION	RC. NUMBER	PARTS NUMBER
Printed Wiring Board (Only)	No Parts		423-40011
Integrated Circuit	μPC4558C	IC5	319-23020
Integrated Circuit	LM3080N	IC2 ~ 4	319-23021
Integrated Circuit	MC14069BCP, UBCP	IC1	319-11001
Integrated Circuit	075-000435	IC6	319-07009
Transistor	2SA1015Y	Q11 ~ 15, 101, 102	305-01051
Transistor	2SC1815Y	Q3, 6, 7, 103, 104	305-03087
Transistor	2SC2240GR	Q8 ~ 10	305-03093
Diode	1S2473	D	306-01017
Diode	1SS133	D108 ~ 120	
Trimmer Pot.	EVL-R4S-A00 100KB		336-01010
Capacitor Electrolytic	10μF/16V	C18 ~ 21, 24	311-08034
Capacitor Ceramic	1500pF/50V	C12, 14, 16	311-01019
Capacitor Ceramic	2200pF/50V	C8, 17	311-01020
Capacitor TF	0.0068μF/50V	C10	311-03013
Capacitor TF	0.015μF/50V	C6	311-26003
Capacitor TF	0.022μF/50V	C22, 23	311-26005
Capacitor TF	0.012μF/50V	C13, 15	311-26002
Capacitor TF	0.082μF/50V	C5, 7	311-26012
Capacitor TF	0.1μF/50V	C1, 4	311-26013
Capacitor TF	0.12μF/50V	C2	311-26014
Capacitor TF	0.22μF/50V	C25	311-26017

EF-88A STRING ENSEMBLE 223-39212

PARTS NAME	DESCRIPTION	RC. NUMBER	PARTS NUMBER
Printed Wiring Board (Only)	No Parts		423-39011A
Integrated Circuit	MC14066BCP	IC1, 2, 3	319-06008
Integrated Circuit	MC14013BCP	IC7, 8	319-03004
Integrated Circuit	μPC4558C	IC4, 5, 6	319-23023
Integrated Circuit	MN3004	IC9, 10	319-26006
Transistor	2SC2240GR	Q1, 2, 15 ~ 21	305-03093
Transistor	2SA-1015Y	Q4, 5, 7, 8, 11, 14	305-01051
Transistor	2SC-1815Y	Q9, 10, 12, 13	305-03087
Diode	1S1555	D2 ~ 5, 7 ~ 15	306-01005
Diode	1S1885	D18	306-01020
Photo Coupler	P873-635-201B	PC1, 2	321-02006
Trimmer Pot.	EVL-R4S-A00 100KB	R81, 100, 139, 150	336-01010
Trimmer Pot.	EVL-R4S-A00 500KB	R68	336-01012
Capacitor Electrolytic	100μF/16V	C53 ~ 58	311-08038
Capacitor Electrolytic	220μF/16V	C40, 41, 59	311-08039
Capacitor Tantalum	1μF/35V	C18, 42 ~ 45	311-09054
Capacitor Tantalum	2.2μF/35V	C9, 16	311-09056
Capacitor Ceramic	27pF/50V K	C45, 50	311-01051
Capacitor Ceramic	100pF/50V K	C5, 12, 19	311-01010
Capacitor Ceramic	150pF/50V K	C29, 38	311-01011
Capacitor Ceramic	330pF/50V K	C21	311-01030
Capacitor Ceramic	560pF/50V K	C26, 27, 35, 36	311-01031
Capacitor Mylar	0.01μF/50V 10%	C24, 33, 47, 48, 51, 52	311-03015
Capacitor Mylar	0.1μF/50V 10%	C1, 2, 3, 10	311-03029
Capacitor Mylar	0.22μF/50V 10%	C4, 6, 8, 11, 13, 15, 22, 30, 31, 39, 46	311-03031
Capacitor Mylar	0.047μF/50V 10%	C23, 25, 32, 34	311-03024
Capacitor Mylar	1200pF/50V 10%	C17	311-03002
Capacitor Mylar	1500pF/50V 10%	C20	311-03003
Capacitor Mylar	2200pF/50V 10%	C28, 37	311-03006

PS-54C POWER SUPPLY BOARD 224-16258 (220V ~ 240V)
224-16261 (120V)
224-16264 (100V)

PARTS NAME	DESCRIPTION	RC. NUMBER	PARTS NUMBER
Printed Wiring Board (Only)	No Parts		424-16056
Integrated Circuit	MC7924CT	IC1	319-28019
Integrated Circuit	μPC4558C	IC2	319-23020
Transistor	2SD526Y	Q1, 4	305-04014
Transistor	2SC1815Y	Q2, 3	305-03087
Transistor	2SA1015Y	Q5, 6	305-01051
Diode	1S1885	D1 ~ 5	306-01020
Diode	1SS133	D9	306-01043
Zener Diode	RD15EB3	D6	337-06034
Zener Diode	RD5.6EB1	D8	337-06042
Zener Diode	RD10EB3	D7	337-06036

PS-54C CONTINUE

PARTS NAME	DESCRIPTION	RC. NUMBER	PARTS NUMBER
Capacitor Electrolytic	10μF/35V	C8	311-08076
Capacitor Electrolytic	100μF/16V	C9	311-08038
Capacitor Electrolytic	470μF/35V	C1	311-08083
Capacitor Electrolytic	1000μF/16V	C2	311-08042
Capacitor Electrolytic	1000μF/35V	C3	311-08084
Capacitor Electrolytic	10μF/16V	C7	311-08034
Capacitor Ceramic	47pF/50V K	C6	311-01027
Fuse	T630mA (NSD) (100V Area)		302-10631
Capacitor	0.047μF/ECQ-F1A (100V Area)		311-04058
Fuse	315mAT (NSD) (NSD Area)		302-10311
Capacitor	0.047μF/ECQ-UF (NSD Area)		311-27004
Fuse	0.75A Slow/Blow UL (UL, CSA Area)		302-21751
Capacitor	0.047μF/ECQ-EC (UL, CSA Area)		311-06011

RA-1C REVERB AMPLIFIER BOARD 223-36213

PARTS NAME	DESCRIPTION	RC. NUMBER	PARTS NUMBER
Printed Wiring Board	No Parts		423-36011A
Transistor	2SC2240GR	Q1, 2, 7, 8	305-03093
Transistor	2SC945Q	Q3	305-03040
Transistor	2SA751Q	Q4	305-01017
Transistor	2SC1406Q	Q5	305-03049
Zener Diode	WZ210	D3	337-07007
Diode	1S1555	D1, 2	306-01005
Trimmer Pot	50KB EVL-V0A	R20	336-13010
Capacitor Electrolytic	100μF/25V B Type	C4	311-08159
Capacitor Electrolytic	220μF/25V B Type	C6	311-08160
Capacitor Electrolytic	4.7μF/50V B Type	C11	311-08184
Capacitor Electrolytic	4.7μF/50V A Type	C3	311-08061
Capacitor Ceramic	220pF/50V	C1, 10	311-01046

Printed in Japan 1981 Sept. 1M